CHAPTER 1

CEILING DIFFUSERS

CHAPTER-1

CEILING DIFFUSERS

PAGE NO.	CONTENTS
01	Introduction, Features & Characteristics, Operating Range.
02	Pattern Selection, Selection Procedure.
03	Different Core Pattern Arrangements.
04 & 05	Square Diffusers – Model 4WS, Construction & Dimensional Details.
06 - 08	Diffuser Accessories.
09	Mounting Instructions.
10	Effective Area Values.
11	Selection Diagrams for Square Diffusers.
12	Selection Diagrams for Rectangular Diffusers.
13 - 16	Tabular Selection for Square Diffusers.
17-20	Tabular Selection for Rectangular Diffusers.
21	Ordering Data.

LOUVRED FACE, MULTI DIRECTIONAL WITH REMOVABLE CORE

BCI multi directional diffusers represent an optimum solution for the diffusion of air from ceiling in modern concept areas with a high use of extruded aluminium with which thanks for their precise line they harmonize perfectly. The different shape of the cones (core) in respect of the number of the air flows (1,2,3 & 4 ways) can itself create an aesthetic element to be utilized.

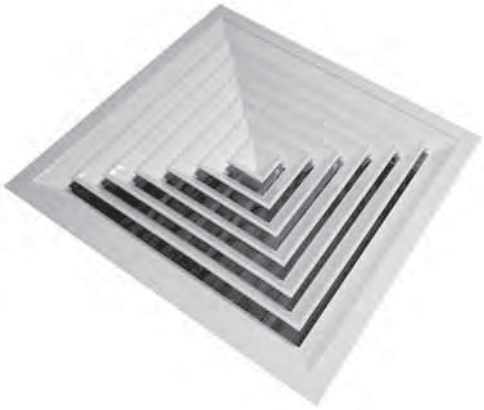

Features & Characteristics :

- Material : Frame & inner cones (core)are made of Extruded Aluminium Profiles of 6063 Alloy by which allow the diffusers to be suitably used for both internal & external applications.
- Both frame & inner cones (core) have a general wall thickness of 1.5 mm (± 0.2 mm tolerance).
- Available in both square & rectangular shapes.
- Units are flush mounted & available with different pattern arrangements 1,2,3& 4 ways (i.e.different ways of air discharge directions).
- Available in wide variety of standard neck sizes ranging from 150 x 150 up to 600 x 600 mm in 75 mm increments.
- The inner cones (core) is fully removable to provide easy :
  - Installation.
  - Adjustment of key operated OBD.
  - Maintenance.
  - Core exchange by different pattern in future.

  The core is held in place & fixed to the frame by two loaded spiral galvanized steel springs.
- The ceiling diffuser projects from the mounting surface by 5 mm.
- Recommended for use in rooms with ceiling heights ranging from 2.5 m to 4.0 m.
- Accessories : see page No. CD-06, 07 & 08.
- Mounting Installations : see page No. CD-09.
- Surface Finishes : see page No. CD-21.

TABLE CD - 01

OPERATING RANGE & QUICK SELECTION TABLE FOR SQUARE DIFFUSERS (MODEL 1,2,3 & 4WS)

SIZE		Noise Level					
mm	Inch	Min.	<25	>25	<30	>30	40
150 x150	6" x 6"	50	145	150	175	–	–
225 x 225	9" x 9"	110	280	285	330	–	–
300 x 300	12" x 12"	200	485	490	550	555	–
375 x 375	15" x 15"	310	615	620	715	720	954
450 x 450	18" x 18"	450	700	705	800	805	1246
525 x 525	21" x 21"	600	950	955	1070	1075	1526
600 x 600	24" x 24"	795	1090	1095	1390	1575	1992

- Figures are in CFM.

LOUVRED FACE, MULTI DIRECTIONAL WITH REMOVABLE CORE

Pattern Selection :

The pattern selection is determined by the shape of the space to be conditioned, the number of diffusers in it, and the type and the location of lighting fixtures or other devices mounted on the same ceiling.
For Example : a two way square diffuser, opposed blades Model 2WS-O might be used in a corridor areas. On the other hand a larger area can often be divided into squares or rectangles of nearly equal areas, if a diffuser can be located in the center of each of these areas, a pattern of Model 4WS (for square areas) or 4WR (for rectangular areas) could be used for four way discharge.

Selection Procedure :

Having established the position where terminals can be sited, refer to data showing core pattern details and select the suitable core pattern required.
knowing the air volume and throw for each diffuser in question then check :

- Recommended limit of air flow rate for each diffuser direction according to ceiling height (table CD-02) with throw of air required lying between the max. and min. values.
- Note Noise Level from performance data diagrams and check the same with Noise Level recommendations table.
- Determine the total pressure drop from performance data.

TABLE CD - 02

Ceiling Height (m)	Max. Flow Rate For each Diffuser Direction (L/s)	Max. Cooling Differential ΔT (°C)
2.5	100	11
3.0	200	13
3.5	350	15
4.0	500	16

LOUVRED FACE, MULTI DIRECTIONAL WITH REMOVABLE CORE

DIFFERENT CORE PATTERN ARRANGEMENTS FOR BOTH SQUARE & RECTANGULAR DIFFUSERS

4 Way - Discharge	3 Way - Discharge	2 Way - Discharge	1 Way - Discharge

SQUARE DIFFUSERS

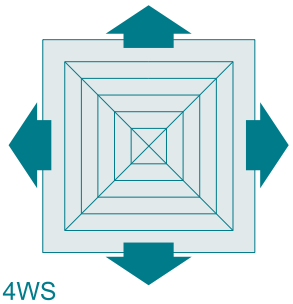
4WS

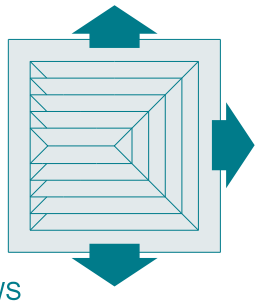
3WS

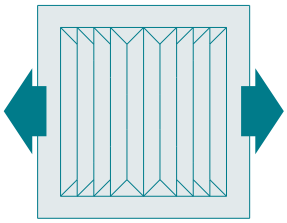
2WS - O

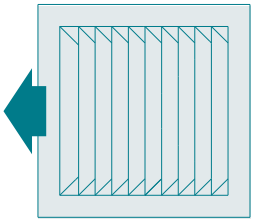
1WS

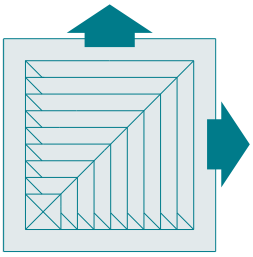
2WS - C

MODELS :

4WS : 4 Way Square Diffuser.
3WS : 3 Way Square Diffuser.
2WS-O : 2 Way Square Diffuser,Opposed Blades.
2WS-C : 2 Way Square Diffuser,Corner Blades.
1WS : 1 Way Square Diffuser.

RECTANGULAR DIFFUSERS

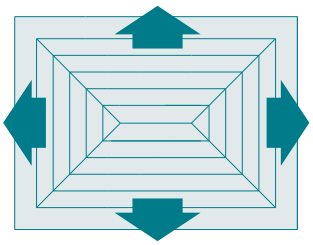
4WR

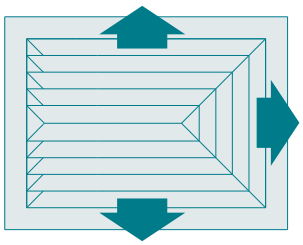
3WR

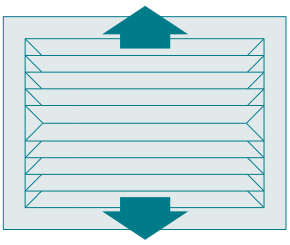
2WR - H

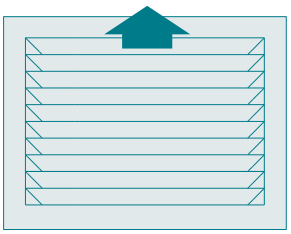
1WR - H

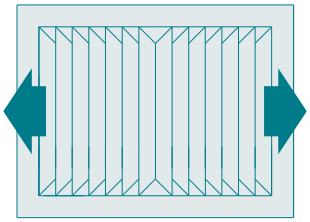
2WR - V

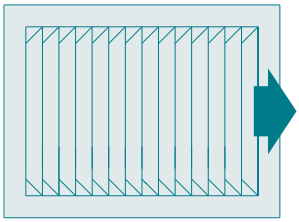
1WR - V

MODELS :

4WR : 4 Way Rectangular Diffuser.
3WR : 3 Way Rectangular Diffuser.
2WR-H: 2 Way Rectangular Diffuser,Horizontal Blades.
2WR-V: 2 Way Rectangular Diffuser,Vertical Blades.
1WR-H: 1 Way Rectangular Diffuser,Horizontal Blades.
1WR-V: 1 Way Rectangular Diffuser,Vertical Blades.

LOUVRED FACE, MULTI DIRECTIONAL WITH REMOVABLE CORE

Square Diffusers - Model 4WS
Construction and Dimensional Details

Supply Air Diffuser c/w Opposed Blade Damper , Model SAD 4WS

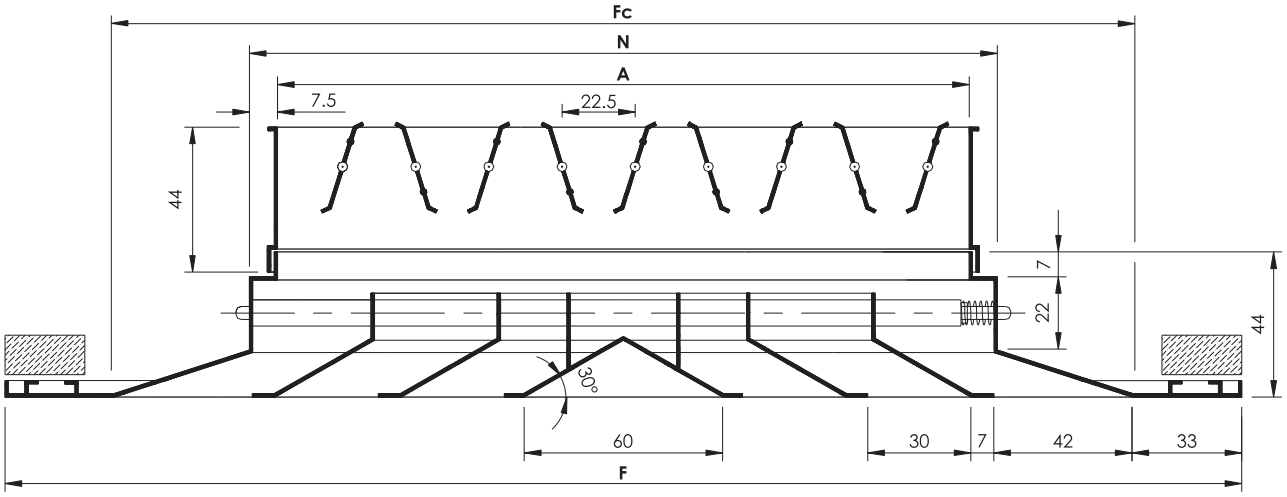

- Diffusers called Supply Air Diffuser and coded as **SAD** are allways equipped with Opposed Blade Damper (provided as standard).

Return, Extract or Exhaust Air Diffuser w/o Opposed Blade Damper , Model RAD or EAD 4WS

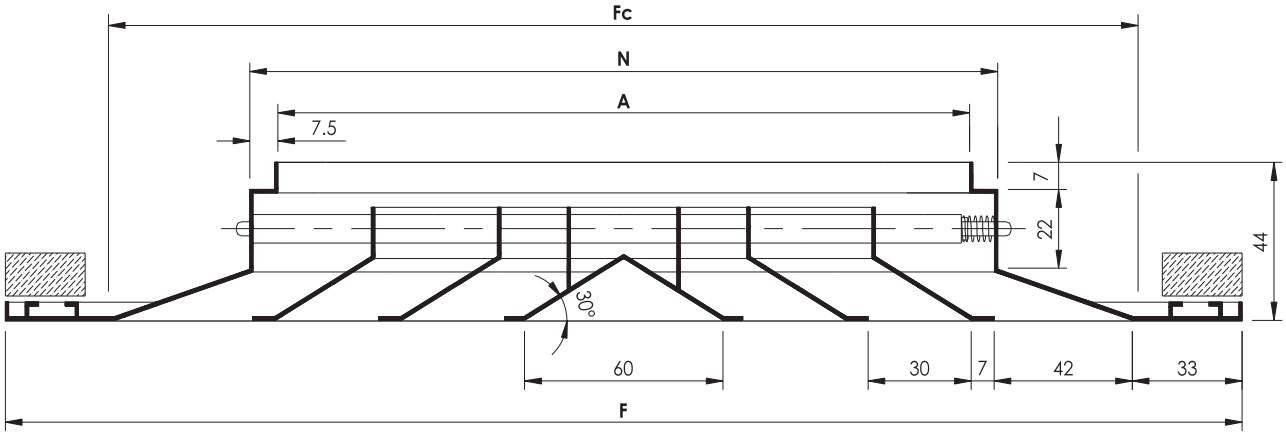

- Unless otherwise specified, Diffusers called Return, Extract or Exhuast Air Diffuser and coded as **RAD** or **EAD** are usually supplied w/o Opposed Blade Damper as a standard.
- In some cases **RAD** or **EAD** are required with Opposed Blade Damper, this will be provided as an option.
- All dimensions are in mm and subject to ±1 mm tolerance.

LOUVRED FACE, MULTI DIRECTIONAL WITH REMOVABLE CORE

Square Diffusers - Model 4WS
Construction and Dimensional Details

Supply Air Diffuser c/w Opposed Blade Damper and Equilizing Grid , Model SAD 4WS + EG

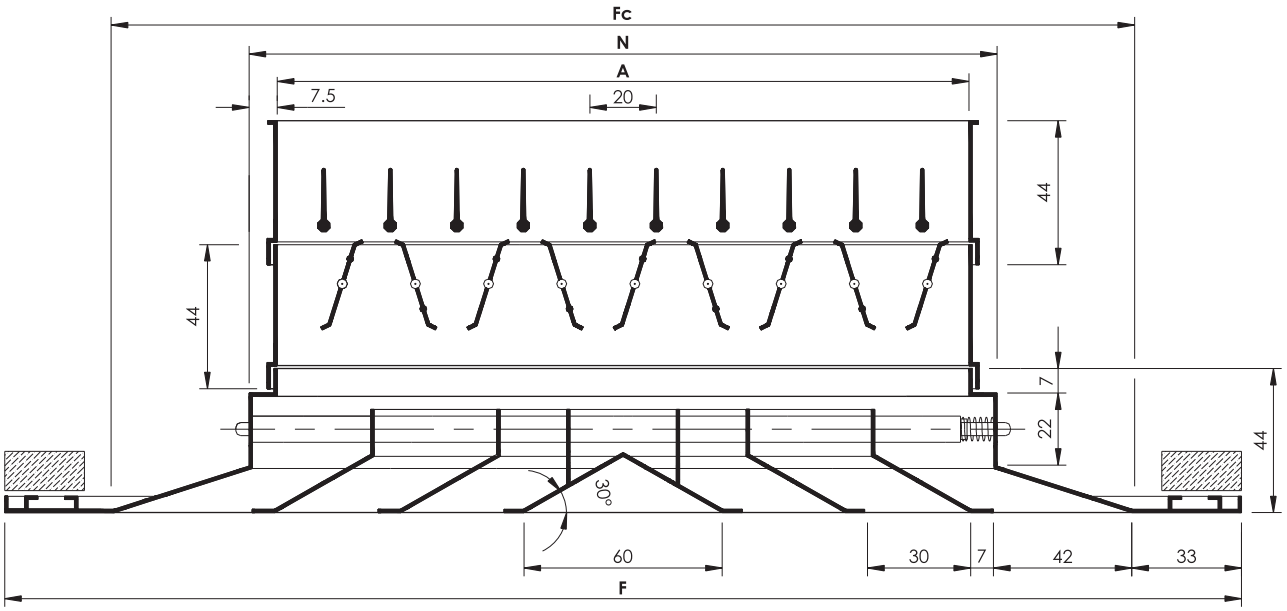

- The Equalizing Grid is available on request as an option.
- The assembly of Equalizing Grid with diffuser provides uniform air flow and distribution over the neck of the diffuser which ensures reduction in pressure losses, noise level and turbulance.
- The blades spaced on 20 mm centres, help to control the air flow in a linear manner.
- Individually adjustable blades allow minor adjustments of air flow and additional control when required (blades can be deflected into different degrees).

TABLE CD - 03

NECK & OVERALL DIMENSIONS FOR SQUARE DIFFUSERS

(N) NOMINAL/LISTED SIZE		(A) ACTUAL NECK SIZE			(F) OUTER FRAME SIZE			(Fc) FALSE CEILING OPENING		
mm	Inch	mm			mm			mm		
150 x 150	6" x 6"	135	x	135	297	x	297	233	x	233
200 x 200	8" x 8"	185	x	185	347	x	347	283	x	283
225 x 225	9" x 9"	210	x	210	372	x	372	308	x	308
300 x 300	12" x 12"	285	x	285	447	x	447	383	x	383
375 x 375	15" x 15"	360	x	360	522	x	522	458	x	458
450 x 450	18" x 18"	435	x	435	597	x	597	533	x	533
500 x 500	20" x 20"	485	x	485	647	x	647	583	x	583
525 x 525	21" x 21"	510	x	510	672	x	672	608	x	608
600 x 600	24" x 24"	585	x	585	747	x	747	683	x	683

- The 18" x 18" diffuser can be replaced on false ceiling with modules of 600 x 600 mm panel.
- Other sizes are available on request.
- All dimensions are in mm and subject to ±1 mm tolerance.

LOUVRED FACE, MULTI DIRECTIONAL WITH REMOVABLE CORE

Diffuser Accessories

A. Opposed Blade Damper

- Frame and Blades are of high quality Extruded Aluminium Profiles construction.
- Blades are designed to rotate opposite to each other.
- The specially designed blades have an overlapping lip which assures a tight closure.
- Generally, the opposed blade damper is attached to the diffuser and fixed to it by means of " S " clips.
- Blades are separated from it's frame by nylon bushes. This method of assembly provides maximum rattle - free performance and eliminates corrosion.
- Usually damper standard surface finish is Aluminium in Mill Finish. Matt black powder coating color is also available on request (as an option).

Opposed Blade Damper - Screw Type Operation (Standard)

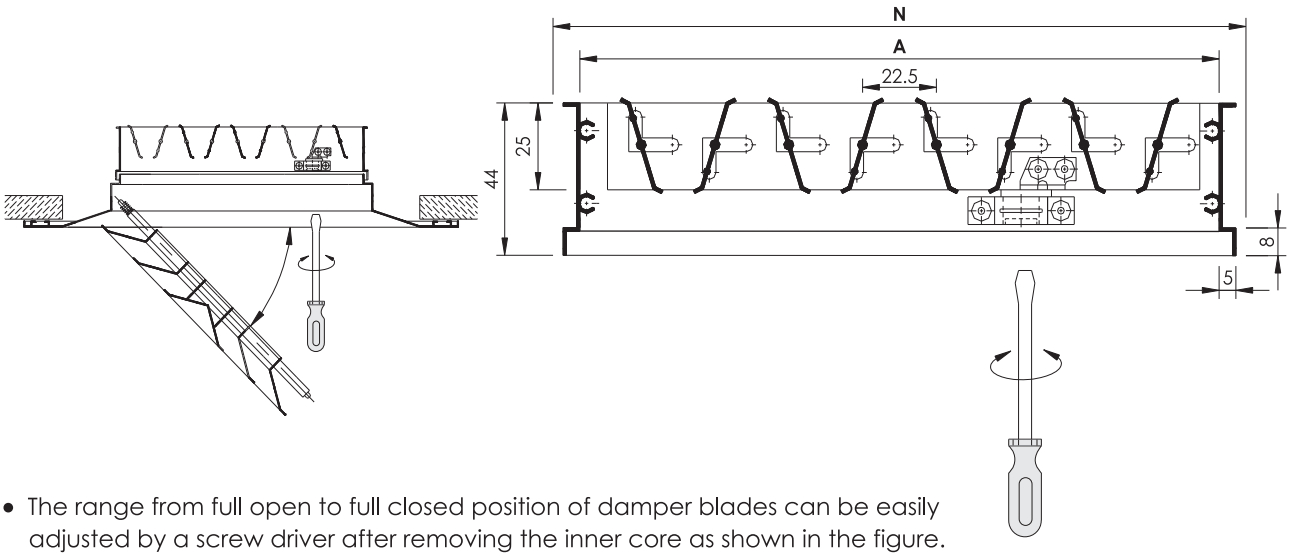

- The range from full open to full closed position of damper blades can be easily adjusted by a screw driver after removing the inner core as shown in the figure.

Opposed Blade Damper - Lever Type Operation (Optional)

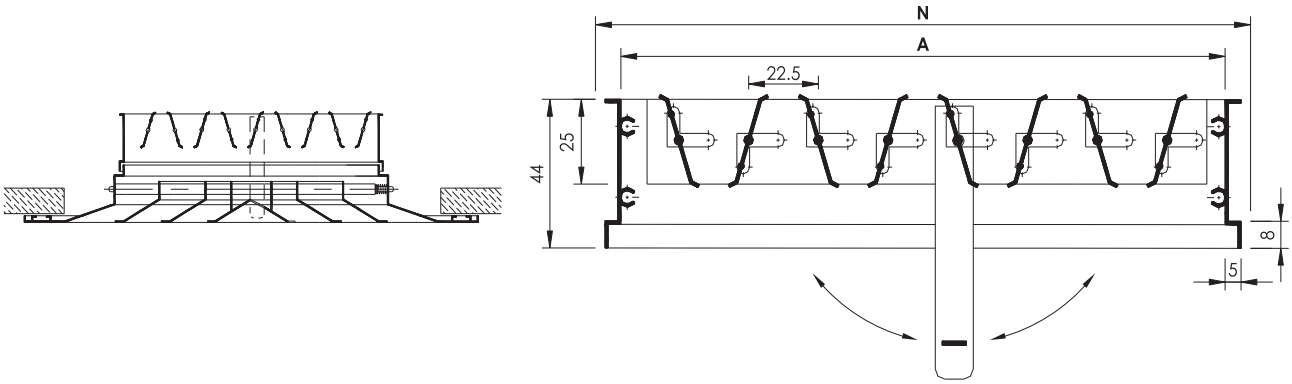

- In this case, blades adjustment can be easily done by lever accessible trough the face of diffuser without removing inner core as shown in the figure.
- All dimensions are in mm and subject to ±1 mm tolerance.

Diffuser Accessories

B. Equalizing Grid (Optional)

- Frame and Blades are of high quality Extruded Aluminium Profiles construction.
- The aerofoil blades are seperated from it's frame by nylon bushes.
- Usually standard surface finish is Aluminium in Mill Finish. Matt black powder coating color is also available on request (as an option).
- For further details, refer to page no. CD-05.

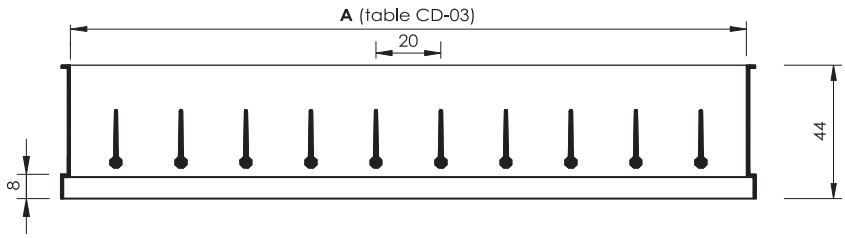

All dimensions are in mm and subject to ±1 mm tolerance.

C. Foam Type Rubber Gasket (Optional)

Gasket Type : Single Sided Self - Adhesive Foam.
Gasket Function : Sealing.
Gasket Benefits :

- Stops diffuser rattling.
- Minimize air infiltration.
- Stops leaks and pressure losses.
- Takes up unevenness of ceiling.
- Easy to apply on site or in factory.

- To be applied around the perimeter of the back side of the diffuser to act as an air seal to prevent pressurised air from escaping from the sides of the diffuser when fixed to the ceiling.

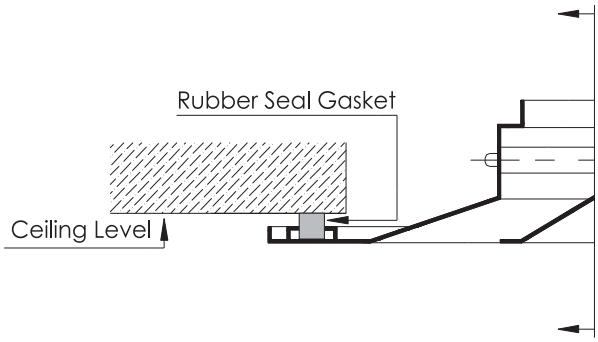

Diffuser Accessories

D. Neck Adaptor (Optional)

Neck Adaptors that are field installed to allow either easy connection to Square duct, or easy connection to Flexible or Round rigid duct.

- Applications :
  For those projects using square duct connections to the air outlets, the Square to Square Neck Adaptors are available for all square diffuser sizes. Adaptor design provides suitable and easy Neck to Duct connection.
  On the other hand, those projects using flexible or round rigid duct connections to the air outlets, the Square to Round Neck Adaptor are available for all square diffuser sizes. Adaptor design provides suitable and easy Neck to Duct connection.

- Material :
  24 Gauge Galvanized steel construction.

- Surface Finishes :
  Mill galvanized as a standard or matt black coated from inside only as an option.

- Fixing Method:
  Adaptor fixed to the back side of the diffuser by rivets.

- Design and Sizes:
  Refer to illustrative sketches and table No. CD-04 below for dimensional data :

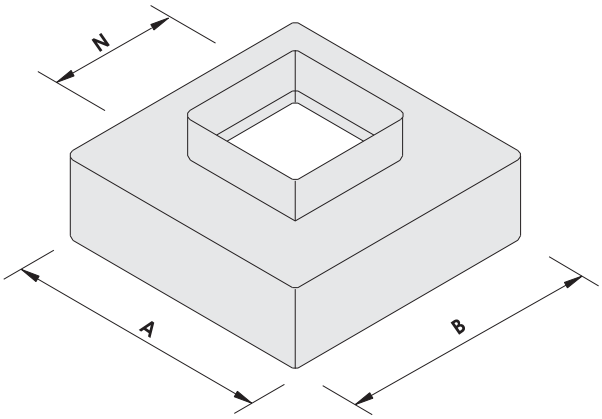

Square to Square Neck Adaptor

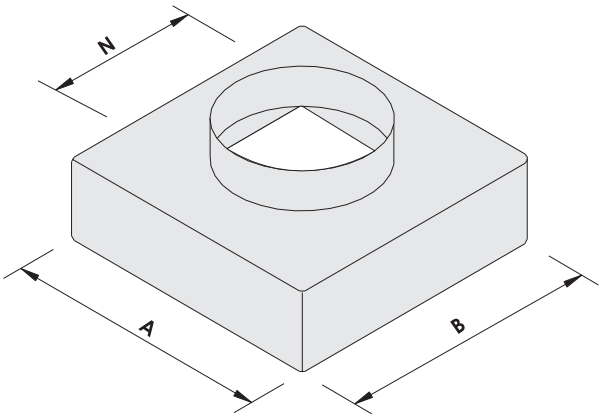

Square to Round Neck Adaptor

TABLE CD-04

AVAILABLE SIZES FOR SQUARE NECK ADAPTORS			
Diffuser Sizes		Adaptor Sizes	
mm	Inch	A (mm)	B (mm)
150 x 150	6" x 6"	142	142
225 x 225	9" x 9"	217	217
300 x 300	12" x 12"	292	292
375 x 375	15" x 15"	367	367
450 x 450	18" x 18"	442	442
525 x 525	21" x 21"	517	517
600 x 600	24" x 24"	592	592

- The Adaptor neck size "N" to be specified by customer.

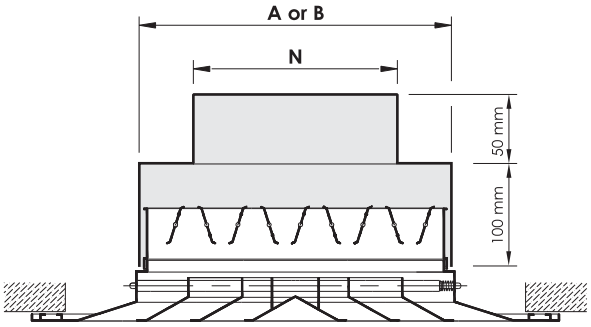

Diffuser Fixed with Neck Adaptor

LOUVRED FACE, MULTI DIRECTIONAL WITH REMOVABLE CORE

Mounting Instructions

Installation With Connection To Duct

Extract the inner core of the diffuser by pushing laterally with respect to the pressure spring until the opposite side emerges from the external frame. Fix the neck of the diffuser to the duct using screws or rivets. Re - mount the inner core inside the frame inserting the pressure springs in their seats and pushing laterally until the opposite parts fix home align the central cones to the frame.

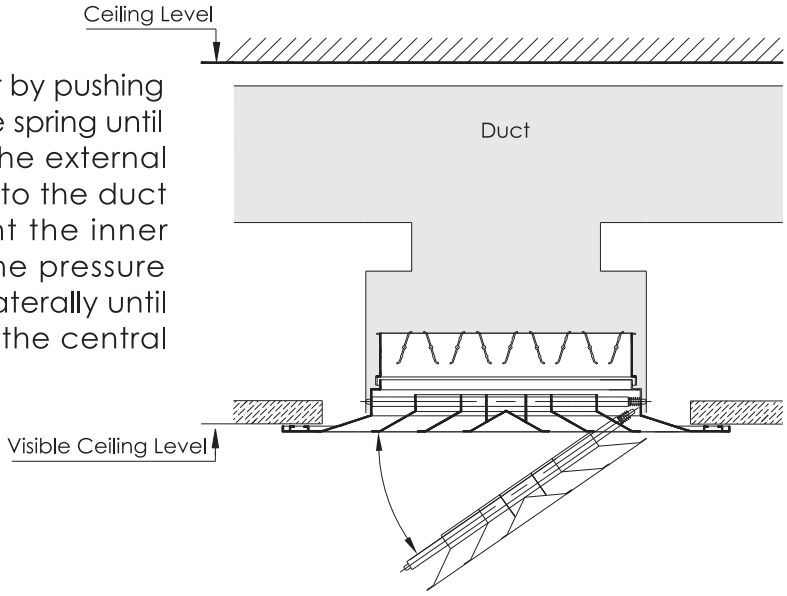

Installation With Suspended Supply Plenum Box

The use of the supply plenum is optimum with any type of false ceilings. It is possible to fix the supply plenum in the desired position by anchoring it to the system with wires. Make connections to the air distribution systems using spiral or flexible duct ensuring the seal and then allowing for ceiling diffuser installation and architectural finalities prior to install and regulate the damper.

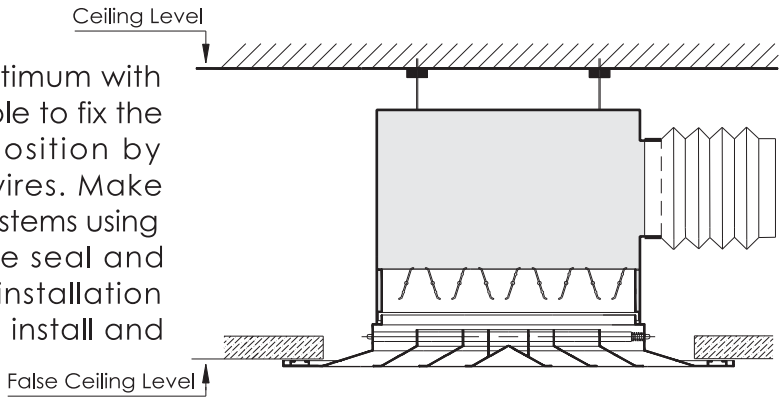

Installation With Diffuser Resting In False Ceiling

In this case it is sufficient to rest the diffuser in the space reserved for the ceiling panel and connect it to the ducting. The internal parts of the diffuser will remain approachable by extracting the central core as explained previously.

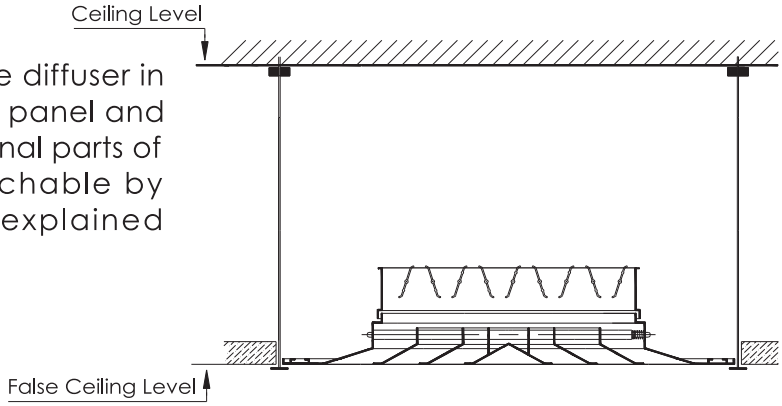

Engineering and Performance Data

Effective Area Values for Square Ceiling Diffusers in (m^2)

TABLE CD-05

SIZE		1 Way-Discharge		2 Way-Discharge		3 Way-Discharge		4 Way-Discharge	
mm	Inch	Supply	Return	Supply	Return	Supply	Return	Supply	Return
150 X 150	6" x 6"	0.007	0.007	0.006	0.006	0.006	0.006	0.007	0.007
200 X 200	8" x 8"	–	–	–	–	0.011	0.010	0.013	0.011
225 X 225	9" x 9"	0.017	0.015	0.015	0.013	0.015	0.013	0.017	0.015
300 X 300	12" x 12"	0.032	0.026	0.030	0.024	0.030	0.024	0.032	0.026
375 X 375	15" x 15"	0.050	0.039	0.048	0.037	0.048	0.037	0.050	0.039
450 X 450	18" x 18"	0.074	0.055	0.071	0.053	0.071	0.053	0.074	0.055
500 X 500	20" x 20"	–	–	–	–	0.079	0.068	0.089	0.070
525 X 525	21" x 21"	0.102	0.074	0.099	0.072	0.099	0.072	0.102	0.074
600 X 600	24" x 24"	0.135	0.095	0.131	0.092	0.131	0.092	0.135	0.095

- Damper at full open position.

Effective Area Values for Rectangular Ceiling Diffusers in (m^2)

TABLE CD-06

SIZE		1 Way-Discharge		2 Way-Discharge		3 Way-Discharge		4 Way-Discharge	
mm	Inch	Supply	Return	Supply	Return	Supply	Return	Supply	Return
225 X 150	9" x 6"	0.010	0.009	0.010	0.009	0.009	0.008	0.009	0.008
300 X 150	12" x 6"	0.014	0.010	0.014	0.010	0.011	0.010	0.011	0.010
300 X 225	12" x 9"	0.022	0.019	0.022	0.019	0.012	0.011	0.020	0.017
375 X 150	15" x 6"	0.018	0.015	0.018	0.015	–	–	0.016	0.014
375 X 225	15" x 9"	0.028	0.023	0.028	0.023	0.026	0.021	0.026	0.021
375 X 300	15" x 12"	0.039	0.030	0.039	0.030	0.037	0.029	–	–
450 X 150	18" x 6"	0.022	0.019	0.022	0.019	–	–	0.020	0.017
450 X 225	18" x 9"	0.034	0.026	0.034	0.026	0.031	0.025	0.031	0.025
450 X 300	18" x 12"	0.047	0.037	0.047	0.037	0.044	0.035	–	–
450 X 375	18" x 15"	–	–	–	–	0.058	0.044	0.058	0.044
525 X 225	21" x 9"	0.040	0.032	0.040	0.032	0.037	0.030	–	–
525 X 300	21" x 12"	0.056	0.043	0.056	0.043	–	–	0.052	0.040
525 X 375	21" x 15"	–	–	–	–	0.068	0.051	0.068	0.051
525 X 450	21" x 18"	–	–	–	–	0.083	0.061	0.083	0.061
600 X 450	24" x 18"	–	–	–	–	0.096	0.070	0.096	0.070

- Damper at full open position.

LOUVRED FACE, MULTI DIRECTIONAL WITH REMOVABLE CORE

Engineering and Performance Data

Selection Diagrams for 1,2,3 & 4 Way Square Ceiling Diffuser

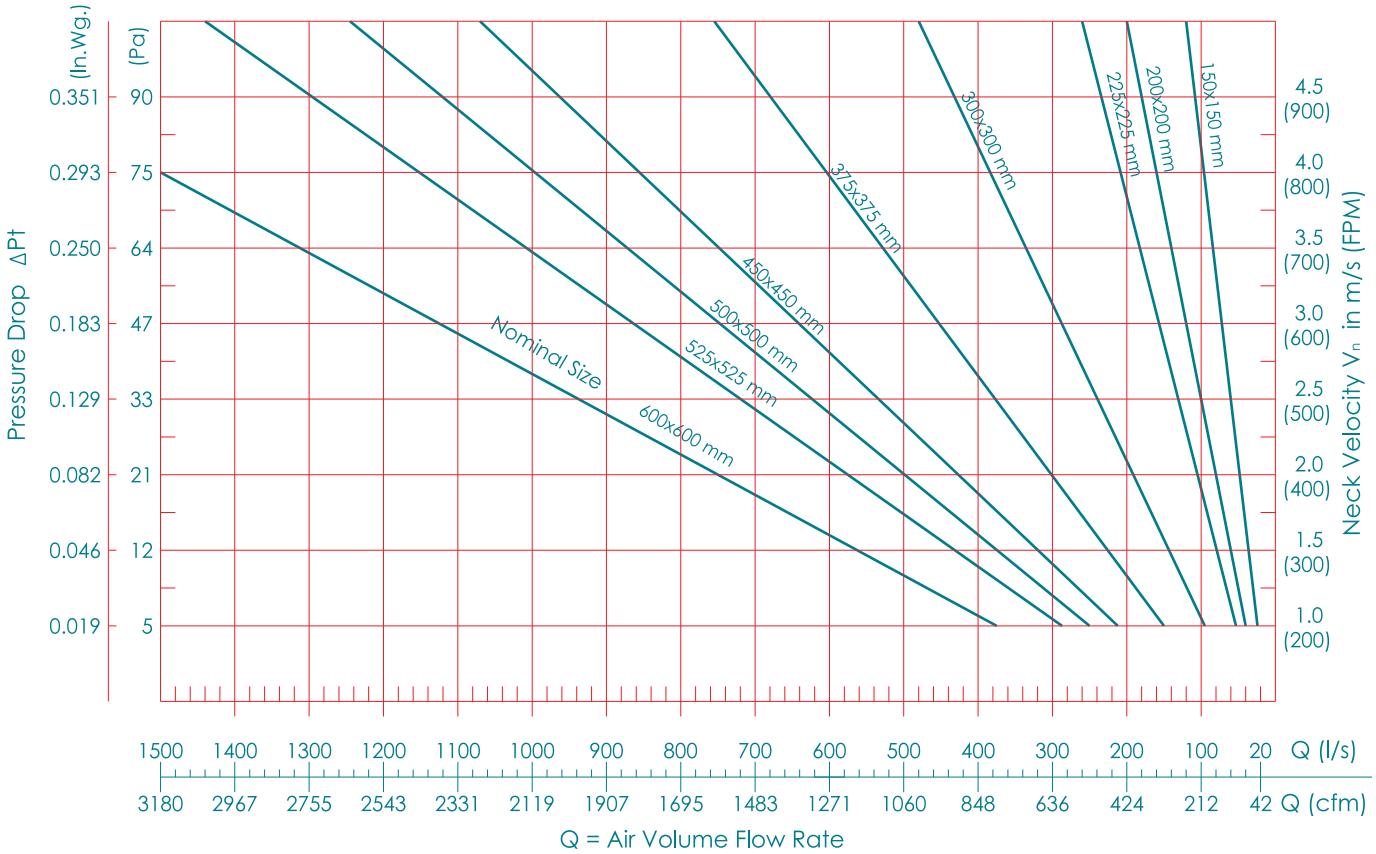

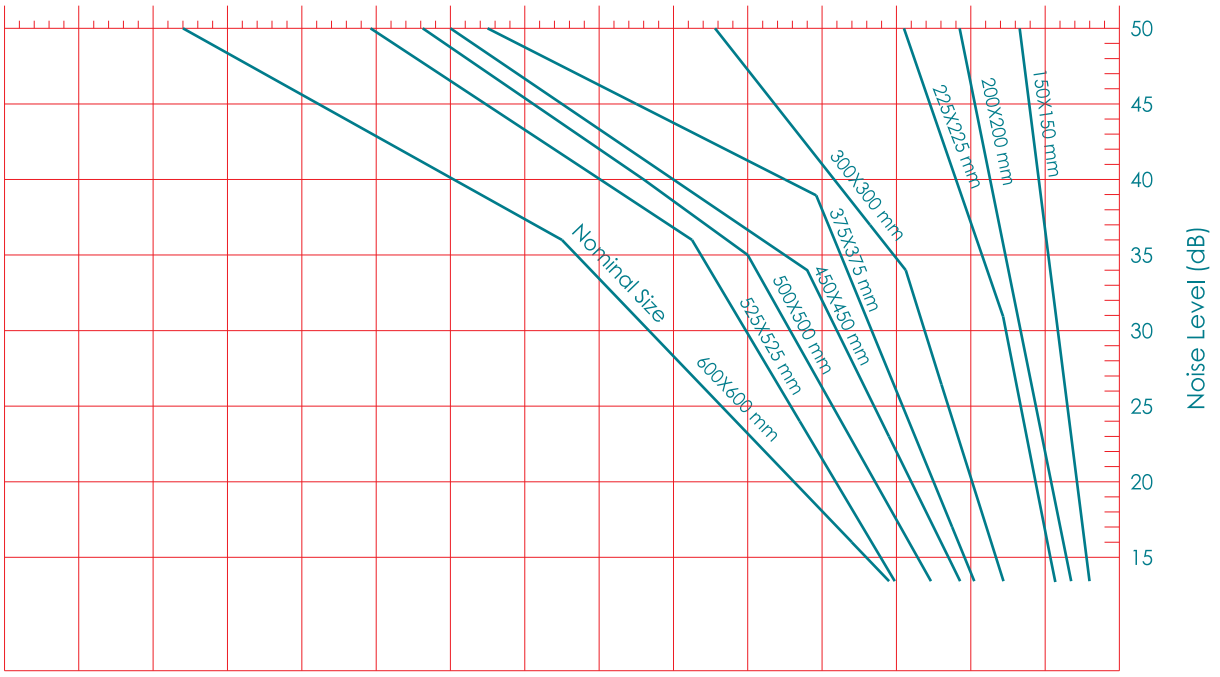

LOUVRED FACE, MULTI DIRECTIONAL WITH REMOVABLE CORE

Engineering and Performance Data

Selection Diagrams for 1,2,3 & 4 Way Rectangular Ceiling Diffuser

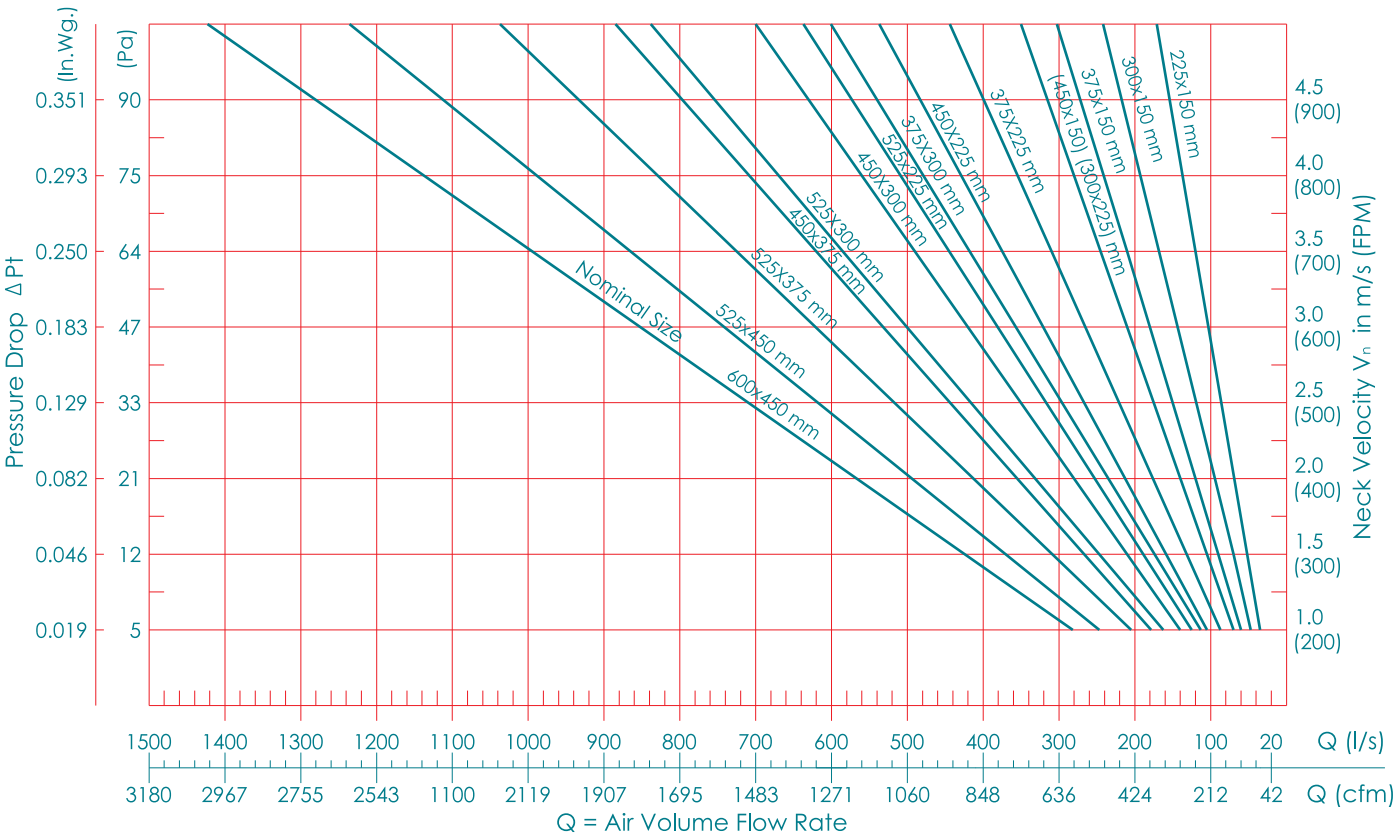

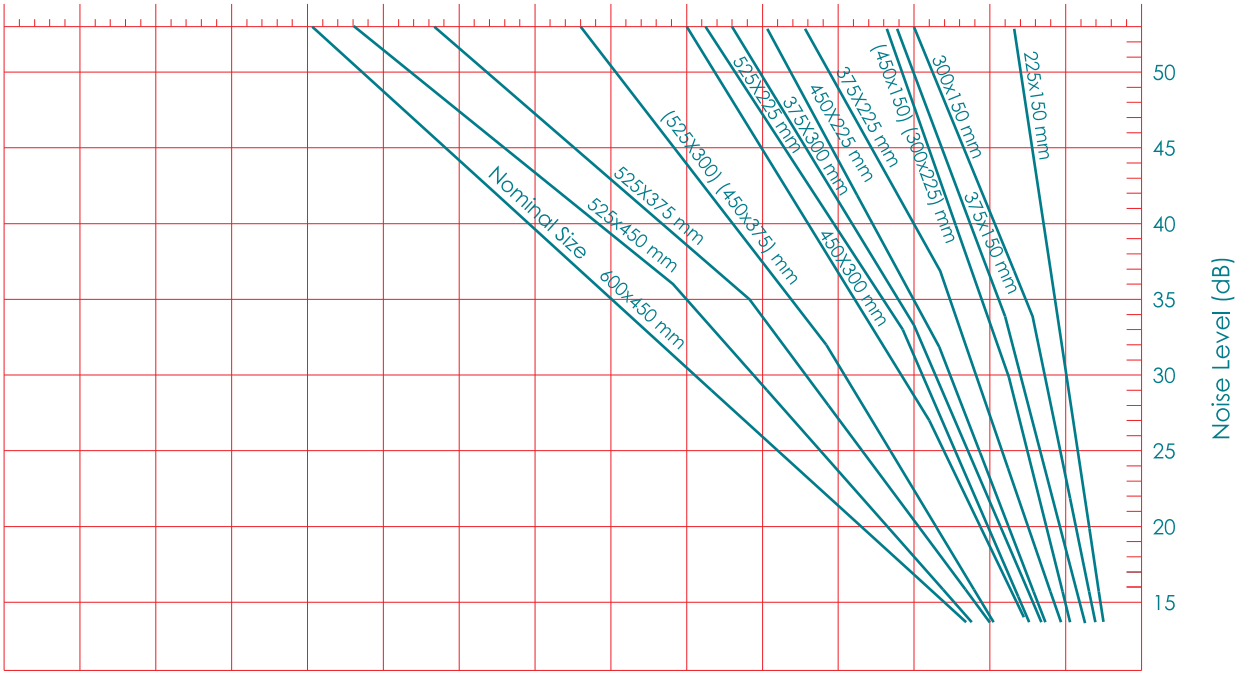

Correction Values for Noise Level :

SIZE (mm)	V_n (m/s)	NC
450 x 375	1.0 - 2.75	+ 2
450 x 375	3.0 - 3.50	+ 1

Availability of Rectangular Diffuser Sizes with respect to it's discharge directions :

SIZE / Pattern	225 X 150	300 X 150	375 X 150	450 X 150	300 X 225	375 X 225	450 X 225	525 X 300	450 X 375	525 X 375	525 X 450	600 X 450	525 X 225	375 X 300	450 X 300
4WR	●	●	●	●	●	●	●	●	●	●	●	●			
3WR	●	●			●	●	●		●	●	●	●	●	●	●
2WR	●	●	●	●	●	●	●	●					●	●	●
1WR	●	●	●	●	●	●	●	●					●	●	●

Engineering & Performance Data

Tabular Selection for 4 Way Square Diffusers - Model 4WS

TABLE CD-07

SIZE mm	SIZE Inch	A eff. (m 2)	Vn FPM (m/s) / △Pt Inwg (Pa)	200 (1.0) / 0.019 (5)	250 (1.25) / 0.031 (8)	300 (1.5) / 0.047 (12)	350 (1.75) / 0.063 (16)	400 (2.0) / 0.082 (21)	450 (2.25) / 0.094 (24)	500 (2.5) / 0.129 (33)	550 (2.75) / 0.141 (36)	600 (3.0) / 0.184 (47)	650 (3.25) / 0.207 (53)	700 (3.5) / 0.250 (64)
150 x 150	6" x 6"	0.007 S 0.007 R	L/S (CFM)	23 (48)	29 (61)	34 (73)	40 (85)	46 (97)	51 (109)	57 (121)	63 (133)	69 (145)	74 (157)	80 (170)
			Th. (m)	0.6-0.9-1.6	0.7-1.0-2.2	0.9-1.2-2.8	1.0-1.3-3.1	1.1-1.5-3.5	1.2-1.7-3.6	1.4-2.1-3.8	1.5-2.4-4.0	1.7-2.9-4.3	1.9-3.1-4.4	2.3-3.5-4.6
			Noise Level	<15	<15	<15	<15	16	19	21	24	26	28	31
200 x 200	8" x 8"	0.013 S 0.011 R	L/S (CFM)	41 (86)	51 (108)	61 (129)	71 (151)	81 (172)	91 (194)	102 (215)	112 (237)	122 (258)	132 (280)	142 (301)
			Th. (m)	0.8-1.3-2.2	0.9-1.4-2.4	1.0-1.5-2.6	1.2-1.6-3.2	1.5-1.8-3.8	1.6-2.0-4.0	1.7-2.1-4.4	1.8-2.4-4.6	1.9-2.8-5.0	2.1-3.1-5.1	2.4-3.6-5.2
			Noise Level	<15	<15	<15	15	17	20	22	25	27	29	32
225 x 225	9" x 9"	0.017 S 0.015 R	L/S (CFM)	51 (109)	64 (136)	77 (163)	90 (191)	103 (218)	116 (245)	129 (272)	141 (300)	154 (327)	167 (354)	180 (381)
			Th. (m)	0.7-1.7-3.2	0.9-1.8-3.4	1.3-1.9-3.6	1.5-2.0-4.0	1.7-2.2-4.5	1.8-2.3-4.6	1.9-2.4-4.7	2.0-2.9-5.0	2.2-3.6-5.3	2.4-3.8-5.4	2.9-4.2-5.6
			Noise Level	<15	<15	<15	15	18	21	24	28	31	33	35
300 x 300	12"x12"	0.032 S 0.026 R	L/S (CFM)	91 (194)	114 (242)	137 (291)	160 (339)	183 (388)	206 (436)	229 (484)	251 (533)	274 (581)	297 (630)	320 (678)
			Th. (m)	1.1-1.7-3.3	1.4-2.0-3.8	1.7-2.3-4.5	1.8-2.4-4.6	2.0-2.5-4.8	2.2-3.0-5.1	2.4-3.7-5.5	2.7-4.0-5.7	3.2-4.4-6.0	3.4-4.5-6.4	3.6-4.7-6.6
			Noise Level	<15	<15	<15	15	19	23	27	30	34	36	37
375 x 375	15"x15"	0.050 S 0.039 R	L/S (CFM)	143 (303)	179 (378)	214 (454)	250 (530)	286 (605)	321 (681)	357 (757)	393 (832)	429 (908)	464 (984)	500 (1095)
			Th. (m)	1.5-2.0-3.8	1.7-2.4-4.2	2.0-2.8-4.7	2.2-3.2-5.1	2.5-3.9-5.6	2.9-4.0-5.8	3.1-4.3-6.1	3.5-4.5-6.4	3.9-4.8-6.8	4.2-5.1-7.1	4.5-5.3-7.5
			Noise Level	<15	<15	17	22	26	31	35	39	40	41	42
450 x 450	18"x18"	0.074 S 0.055 R	L/S (CFM)	206 (436)	257 (545)	309 (654)	360 (763)	411 (872)	463 (981)	514 (1090)	566 (1199)	617 (1308)	669 (1417)	720 (1526)
			Th. (m)	1.7-2.3-4.5	1.9-2.8-4.9	2.2-3.5-5.4	2.6-4.0-5.7	3.2-4.5-6.3	3.4-4.6-6.5	3.7-4.8-6.7	4.0-5.1-7.1	4.4-5.4-7.5	4.5-5.5-7.7	4.7-5.6-8.0
			Noise Level	<15	19	24	29	33	34	38	40	41	43	45
500 x 500	20"x20"	0.089 S 0.070 R	L/S (CFM)	254 (538)	318 (673)	381 (807)	445 (942)	508 (1077)	572 (1211)	635 (1346)	699 (1480)	762 (1615)	826 (1749)	889 (1884)
			Th. (m)	1.8-2.4-4.8	2.1-2.5-5.2	2.4-2.6-5.6	2.7-2.8-5.8	3.3-3.4-6.2	3.5-4.7-6.6	3.9-5.0-6.9	4.2-5.2-7.3	4.5-5.5-7.7	4.6-5.7-7.9	4.9-6.0-8.3
			Noise Level	<15	19	24	29	35	37	39	41	44	46	49
525 x 525	21"x21"	0.102 S 0.074 R	L/S (CFM)	281 (595)	351 (744)	421 (893)	492 (1042)	562 (1191)	632 (1339)	702 (1488)	773 (1637)	843 (1786)	913 (1935)	983 (2084)
			Th. (m)	1.9-2.9-4.8	2.3-3.2-5.2	2.8-3.6-5.6	3.1-4.0-6.0	3.6-4.7-6.5	3.9-4.9-6.7	4.3-5.2-7.2	4.5-5.4-7.5	4.7-5.6-8.0	4.8-5.9-8.3	5.1-6.3-8.7
			Noise Level	<15	20	24	30	36	38	41	43	45	48	50
600 x 600	24"x24"	0.135 S 0.095 R	L/S (CFM)	366 (775)	457 (969)	549 (1163)	640 (1356)	732 (1550)	823 (1744)	914 (1938)	1006 (2131)	1097 (2325)	1189 (2519)	1280 (2713)
			Th. (m)	2.3-3.2-5.0	2.6-3.8-5.9	3.3-4.5-6.3	3.6-4.7-6.6	4.2-5.1-7.2	4.4-5.3-7.3	4.6-5.5-7.6	4.8-5.7-8.0	5.0-5.9-8.7	5.1-6.2-9.1	5.3-6.6-9.5
			Noise Level	17	22	27	31	36	39	41	44	46	49	52

Noise level values are based on 10 dB room attenuation.

S : Supply Air (Damper is fully open).
R : Return Air.
Aeff. : Effective Area.
Vn : Neck Velocity.
△ Pt : Total Pressure Drop.
Th. : Throw distance measured at Terminal Velocity Vt = 0.75, 0.50 & 0.25 m/s respectively.

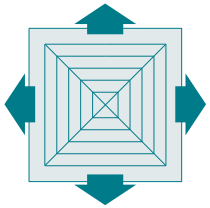

Model 4WS

Correction Multipliers and Values :

Damper Opening Position	Noise Level (Additional)	Pressure Drop △Pt (Multiplier)
25 % open	+ 10 dB	x 2.4
50 % open	+ 5 dB	x 1.4
100 % open	+ 0 dB	x 1.0

Engineering & Performance Data

Tabular Selection for 3 Way Square Diffusers - Model 3WS

TABLE CD-08

SIZE mm	SIZE Inch	$A_{eff.}$ (m^2)	V_n FPM (m/s) / $\triangle P_t$ Inwg (Pa)	200 (1.0)	250 (1.25)	300 (1.5)	350 (1.75)	400 (2.0)	450 (2.25)	500 (2.5)	550 (2.75)	600 (3.0)	650 (3.25)	700 (3.5)
				0.019 (5)	0.031 (8)	0.047 (12)	0.063 (16)	0.082 (21)	0.094 (24)	0.129 (33)	0.141 (36)	0.184 (47)	0.207 (53)	0.250 (64)
150 x 150	6" x 6"	0.006 S 0.006 R	L/S (CFM)	24 (51)	30 (64)	38 (81)	40 (85)	48 (102)	54 (114)	60 (127)	66 (140)	72 (153)	78 (165)	84 (178)
			Thx (m)	0.7-1.0-1.6	0.9-1.1-2.2	1.1-1.2-2.9	1.2-1.4-3.2	1.3-1.6-3.6	1.4-1.8-3.8	1.6-2.1-4.0	1.7-2.5-4.2	1.8-2.7-4.5	2.0-3.0-4.6	2.3-3.3-4.8
			Thy (m)	0.8-1.1-2.3	1.0-1.4-2.6	1.2-1.8-3.2	1.3-2.0-3.5	1.5-2.3-3.8	1.6-2.5-4.1	1.7-2.8-4.5	1.9-3.0-4.6	2.2-3.2-4.8	2.3-3.4-4.9	2.5-3.6-5.0
			Noise Level	<15	<15	<15	<15	16	19	21	24	26	28	31
200 x 200	8" x 8"	0.011 S 0.010 R	L/S (CFM)	40 (85)	50 (106)	60 (127)	70 (148)	80 (169)	90 (191)	100 (212)	110 (233)	120 (254)	130 (275)	140 (297)
			Thx (m)	0.8-1.2-2.2	1.0-1.4-2.4	1.2-1.6-2.7	1.3-1.7-3.3	1.4-1.9-3.9	1.5-2.1-4.2	1.7-2.3-4.5	1.8-2.6-4.7	2.0-2.8-4.9	2.2-3.2-5.0	2.4-3.4-5.2
			Thy (m)	0.9-1.3-2.7	1.1-1.6-3.0	1.3-2.1-3.4	1.5-2.3-3.7	1.7-2.6-4.2	1.9-2.7-4.5	2.0-2.9-5.1	2.2-3.1-5.3	2.4-3.4-5.5	2.5-3.5-5.7	2.6-3.7-6.0
			Noise Level	<15	<15	<15	15	17	20	22	25	27	29	32
225 x 225	9" x 9"	0.015 S 0.013 R	L/S (CFM)	53 (112)	68 (144)	80 (170)	92 (195)	105 (222)	118 (250)	130 (275)	143 (303)	160 (339)	170 (360)	185 (392)
			Thx (m)	0.9-1.3-2.4	1.1-1.5-2.9	1.3-1.7-3.6	1.5-1.9-4.0	1.7-2.2-4.4	1.8-2.4-4.7	1.9-2.5-5.0	2.2-3.1-5.1	2.4-3.7-5.3	2.6-3.9-5.5	2.9-4.2-5.7
			Thy (m)	1.1-1.4-2.8	1.2-1.7-3.5	1.4-2.3-4.1	1.7-2.6-4.5	2.0-3.0-4.9	2.1-3.2-5.1	2.3-3.5-5.3	2.6-4.0-5.7	2.9-4.4-6.2	3.5-4.8-6.6	4.2-5.1-7.2
			Noise Level	<15	<15	<15	15	18	21	24	28	31	33	35
300 x 300	12"x12"	0.030 S 0.024 R	L/S (CFM)	95 (201)	120 (254)	140 (297)	168 (356)	190 (402)	218 (462)	240 (509)	263 (557)	285 (604)	312 (661)	338 (716)
			Thx (m)	1.2-1.5-3.1	1.3-2.0-3.6	1.6-2.5-4.5	1.8-2.8-4.7	2.1-3.3-5.1	2.3-3.6-5.3	2.6-3.9-5.6	2.9-4.2-5.8	3.3-4.5-6.1	3.4-4.6-6.3	3.5-4.8-6.6
			Thy (m)	1.3-1.8-3.7	1.5-2.1-4.0	2.1-2.4-4.7	2.3-3.2-5.2	2.6-4.0-5.8	2.9-4.2-6.0	3.3-4.5-6.3	3.5-4.6-6.4	3.8-4.8-6.9	4.0-4.9-7.0	4.4-5.3-7.4
			Noise Level	<15	<15	<15	15	19	23	27	30	34	36	37
375 x 375	15"x15"	0.048 S 0.037 R	L/S (CFM)	150 (317)	188 (398)	225 (477)	265 (562)	300 (636)	340 (720)	375 (795)	415 (879)	450 (954)	490 (1038)	528 (1119)
			Thx (m)	1.5-1.8-3.7	1.7-2.2-4.2	2.1-3.1-5.0	2.3-3.5-5.3	2.6-4.0-5.7	2.9-4.2-6.0	3.2-4.5-6.3	3.5-4.6-6.5	4.0-4.8-7.0	4.2-5.2-7.2	4.5-5.4-7.5
			Thy (m)	1.5-2.4-4.3	2.0-3.1-4.7	2.5-3.7-5.4	2.9-4.1-6.0	3.4-4.5-6.6	3.7-4.7-6.8	4.2-5.0-6.9	4.3-5.2-7.2	4.5-5.4-7.5	4.6-5.5-7.7	4.8-5.6-8.1
			Noise Level	<15	<15	17	22	26	31	35	39	40	41	42
450 x 450	18"x18"	0.071 S 0.053 R	L/S (CFM)	212 (449)	268 (568)	320 (678)	373 (790)	425 (900)	480 (1017)	530 (1123)	588 (1246)	640 (1356)	695 (1473)	750 (1589)
			Thx (m)	1.5-2.1-4.3	1.8-2.7-4.6	2.3-3.6-5.3	2.7-4.0-5.6	3.4-4.4-6.3	3.6-4.5-6.6	3.9-4.7-6.9	4.2-5.0-7.2	4.5-5.4-7.5	4.7-5.6-7.7	4.9-5.8-8.1
			Thy (m)	1.8-2.7-4.6	2.4-3.4-5.2	3.0-4.1-5.9	3.4-4.4-6.4	3.9-4.8-7.0	4.2-5.1-7.2	4.4-5.1-7.2	4.7-5.7-7.7	4.8-5.9-8.1	5.0-6.1-8.5	5.3-6.3-9.0
			Noise Level	<15	19	24	29	34	33	38	40	41	43	45
500 x 500	20"x20"	0.079 S 0.068 R	L/S (CFM)	250 (530)	313 (663)	375 (795)	437 (926)	500 (1060)	560 (1187)	625 (1324)	685 (1452)	742 (1572)	810 (1716)	875 (1854)
			Thx (m)	1.7-2.6-4.5	2.1-3.3-5.0	2.6-4.0-5.6	3.3-4.4-6.0	3.6-4.8-6.5	4.1-5.0-6.8	4.2-5.1-7.1	4.4-5.3-7.4	4.6-5.5-7.8	4.8-5.7-8.1	5.0-6.0-8.4
			Thy (m)	2.0-3.3-5.1	2.6-3.6-5.6	3.3-4.2-6.2	3.6-4.6-6.5	4.2-5.3-7.1	4.3-5.5-7.4	4.6-5.7-7.8	4.8-5.9-8.2	5.1-6.0-8.5	5.3-6.3-9.0	5.6-6.6-9.5
			Noise Level	<15	19	24	29	35	37	39	41	44	46	49
525 x 525	21"x21"	0.099 S 0.072 R	L/S (CFM)	287 (608)	360 (762)	430 (911)	505 (1070)	575 (1218)	645 (1367)	720 (1526)	792 (1678)	860 (1822)	915 (1940)	1000 (2119)
			Thx (m)	2.0-2.8-4.8	2.5-3.5-5.2	3.0-4.2-5.8	3.4-4.5-6.2	3.7-4.9-6.6	4.0-5.1-7.0	4.4-5.3-7.4	4.6-5.5-7.7	4.8-5.8-8.2	5.0-6.0-8.5	5.2-6.3-8.7
			Thy (m)	2.3-3.5-5.4	2.9-4.0-5.9	3.6-4.5-6.5	4.0-5.0-6.8	4.5-5.5-7.2	4.6-5.7-7.6	4.8-5.9-8.1	5.1-6.1-8.5	5.4-6.4-9.0	5.5-6.7-9.4	5.7-7.0-9.8
			Noise Level	<15	20	24	30	36	38	41	43	45	48	50
600 x 600	24"x24"	0.131 S 0.092 R	L/S (CFM)	375 (795)	470 (996)	560 (1187)	658 (1394)	750 (1589)	843 (1786)	940 (1992)	1031 (2185)	1120 (2373)	1220 (2585)	1312 (2780)
			Thx (m)	2.4-3.3-5.2	2.8-3.8-5.6	3.4-4.5-6.3	3.7-4.8-6.8	4.2-5.1-7.2	4.4-5.3-7.5	4.7-5.7-7.8	4.9-5.9-8.2	5.0-6.2-8.7	5.2-6.3-9.0	5.5-6.5-9.4
			Thy (m)	2.6-4.0-6.0	3.2-4.2-6.5	3.8-4.7-7.1	4.1-5.1-7.5	4.6-5.7-8.0	4.7-6.0-8.3	5.1-6.3-8.7	5.3-6.5-9.2	5.7-7.0-9.8	5.9-7.1-10.1	6.0-7.2-10.5
			Noise Level	17	22	27	31	36	39	41	44	46	49	52

Tabulated data are subject to the same corrections as in page No. CD-13.

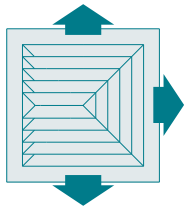

Model 3WS

Engineering & Performance Data

Tabular Selection for 2 Way Square Diffusers - Model 2WS-O and 2WS-C

TABLE CD-09

SIZE mm	SIZE Inch	$A_{eff.}$ (m^2)	V_n FPM (m/s) / $\triangle P_t$ Inwg (Pa)	200 (1.0) 0.019 (5)	250 (1.25) 0.031 (8)	300 (1.5) 0.047 (12)	350 (1.75) 0.063 (16)	400 (2.0) 0.082 (21)	450 (2.25) 0.094 (24)	500 (2.5) 0.129 (33)	550 (2.75) 0.141 (36)	600 (3.0) 0.184 (47)	650 (3.25) 0.207 (53)	700 (3.5) 0.250 (64)
150 x 150	6" x 6"	0.006 S 0.006 R	L/S (CFM) Th. (m) Noise Level	24 (51) 0.8-1.0-2.5 <15	30 (64) 1.0-1.4-2.9 <15	38 (81) 1.2-2.0-3.5 <15	40 (85) 1.5-2.3-3.9 <15	48 (102) 1.8-2.6-4.3 16	54 (114) 2.2-3.0-4.0 19	60 (127) 2.4-3.3-4.4 21	66 (140) 2.6-3.5-4.7 24	72 (153) 2.8-3.7-5.1 26	78 (153) 3.1-3.8-5.4 28	84 (178) 3.4-3.9-5.8 31
225 x 225	9" x 9"	0.015 S 0.013 R	L/S (CFM) Th. (m) Noise Level	53 (112) 1.0-1.7-3.3 <15	68 (144) 1.3-2.1-3.8 <15	80 (170) 1.6-2.6-4.5 <15	92 (195) 1.9-2.9.4.7 15	105 (222) 2.3-3.3-5.1 18	118 (250) 2.6-3.7-5.4 21	130 (275) 2.9-4.2-5.7 24	143 (303) 3.1-4.3-6.0 28	160 (339) 3.3-4.5-6.3 31	170 (360) 3.5-4.6-6.5 33	185 (392) 3.9-4.8-6.9 35
300 x 300	12"x12"	0.030 S 0.024 R	L/S (CFM) Th. (m) Noise Level	95 (201) 1.7-2.3-4.2 <15	120 (254) 2.0-2.6-4.5 <15	140 (297) 2.3-3.3-5.2 <15	168 (356) 2.6-3.7-5.6 15	190 (402) 3.1-4.2-6.0 19	218 (462) 3.4-4.5-6.3 23	240 (509) 3.7-4.9-6.6 27	263 (557) 3.9-5.0-6.9 30	285 (604) 4.2-5.1-7.3 34	312 (661) 4.3-5.5-7.6 36	338 (716) 4.5-5.9-7.9 37
375 x 375	15"x15"	0.048 S 0.037 R	L/S (CFM) Th. (m) Noise Level	150 (317) 2.0-2.8-4.7 <15	188 (398) 2.7-3.5-5.2 <15	225 (477) 3.0-4.2-5.7 17	265 (562) 3.5-4.5-6.1 22	300 (636) 4.0-4.8-6.6 26	340 (720) 4.2-5.2-7.0 31	375 (795) 4.5-5.5-7.5 35	415 (879) 4.6-5.4-7.7 39	450 (954) 4.8-5.9-8.1 40	490 (1038) 4.9-6.1-8.4 41	528 (1119) 5.1-6.3-8.7 42
450 x 450	18"x18"	0.071 S 0.053 R	L/S (CFM) Th. (m) Noise Level	212 (449) 2.3-3.4-5.1 <15	268 (568) 2.9-3.8-5.6 19	320 (678) 3.3-4.4-6.3 24	373 (790) 3.7-4.7-6.7 29	425 (900) 4.2-5.1-7.2 34	480 (1017) 4.5-5.4-7.8 33	530 (1123) 4.8-5.7-8.1 38	588 (1246) 4.9-6.0-8.3 40	640 (1356) 5.1-6.3-8.6 41	695 (1473) 5.4-6.6-9.2 43	750 (1589) 5.7-6.9-9.8 45
525 x 525	21"x21"	0.099 S 0.072 R	L/S (CFM) Th. (m) Noise Level	287 (608) 2.7-3.8-5.7 <15	360 (762) 3.2-4.2-6.3 20	430 (911) 3.8-4.7-6.9 24	505 (1070) 4.3-5.2-7.4 30	575 (1218) 4.8-5.7-7.9 36	645 (1367) 4.9-5.9-8.0 38	720 (1526) 5.0-6.0-8.3 41	792 (1678) 5.1-6.2-8.5 43	860 (1822) 5.2-6.4-8.7 45	915 (1940) 5.6-6.9-9.5 48	1000 (2119) 6.0-7.5-10.3 50
600 x 600	24"x24"	0.131 S 0.092 R	L/S (CFM) Th. (m) Noise Level	375 (795) 2.8-4.1-6.0 17	470 (996) 3.5-4.6-6.5 22	560 (1187) 4.3-5.1-7.1 27	658 (1394) 4.6-5.5-7.6 31	750 (1589) 5.1-6.0-8.5 36	843 (1786) 5.3-6.3-9.1 39	940 (1992) 5.5-6.6-9.5 41	1031 (2185) 5.7-6.8-10.2 44	1120 (2373) 6.0-7.3-10.4 46	1220 (2585) 6.3-7.6-10.8 49	1312 (2780) 6.6-7.9-11.3 52

Tabulated data are subject to the same corrections as in page No. CD-13.

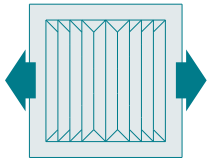

Model 2WS-O

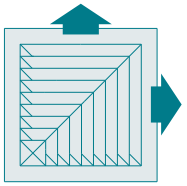

Model 2WS-C

Engineering & Performance Data

Tabular Selection for 1 Way Square Diffusers - Model 1WS

TABLE CD-10

SIZE mm	SIZE Inch	A eff. (m 2)	V_n FPM (m/s) / $\triangle P_t$ Inwg (Pa)	200 (1.0) 0.019 (5)	250 (1.25) 0.031 (8)	300 (1.5) 0.047 (12)	350 (1.75) 0.063 (16)	400 (2.0) 0.082 (21)	450 (2.25) 0.094 (24)	500 (2.5) 0.129 (33)	550 (2.75) 0.141 (36)	600 (3.0) 0.184 (47)	650 (3.25) 0.207 (53)	700 (3.5) 0.250 (64)
150 x 150	6" x 6"	0.007 S 0.007 R	L/S (CFM)	24 (51)	30 (64)	38 (81)	40 (85)	48 (102)	54 (114)	60 (127)	66 (140)	72 (153)	78 (153)	84 (178)
			Th. (m)	1.3-1.7-3.7	1.4-2.2-4.1	1.6-2.8-4.3	1.8-2.9-4.5	2.8-3.6-4.9	3.0-3.8-5.3	3.2-4.0-5.7	3.4-4.3-6.1	3.6-4.5-6.4	3.8-4.7-6.6	3.9-4.8-6.8
			Noise Level	<15	<15	<15	<15	16	19	21	24	26	28	31
225 x 225	9" x 9"	0.017 S 0.015 R	L/S (CFM)	53 (112)	68 (144)	80 (170)	92 (195)	105 (222)	118 (250)	130 (275)	143 (303)	160 (339)	170 (360)	185 (392)
			Th. (m)	1.8-2.3-4.6	2.1-2.8-4.8	2.2-3.4-5.2	2.3-3.7-5.5	3.3-4.4-6.0	3.6-4.6-6.5	3.9-4.8-7.0	4.2-5.1-7.3	4.5-5.4-7.6	4.6-5.5-7.9	4.8-5.7-8.2
			Noise Level	<15	<15	<15	15	18	21	24	28	31	33	35
300 x 300	12"x12"	0.032 S 0.026 R	L/S (CFM)	95 (201)	120 (254)	140 (297)	168 (356)	190 (402)	218 (462)	240 (509)	263 (557)	285 (604)	312 (661)	338 (716)
			Th. (m)	2.3-3.6-5.3	2.7-3.9-5.4	3.1-4.3-5.8	3.3-4.5-6.2	4.4-5.1-7.0	4.6-5.4-7.3	4.8-5.7-7.8	4.9-5.9-8.3	5.1-6.0-8.8	5.3-6.4-9.1	5.5-6.6-9.5
			Noise Level	<15	<15	<15	15	19	23	27	30	34	36	37
375 x 375	15"x15"	0.050 S 0.039 R	L/S (CFM)	150 (317)	188 (398)	225 (477)	265 (562)	300 (636)	340 (720)	375 (795)	415 (879)	450 (954)	490 (1038)	528 (1119)
			Th. (m)	2.6-3.9-6.0	3.2-4.3-6.3	3.7-4.6-6.7	3.9-4.8-6.9	4.8-5.7-7.8	5.0-6.0-8.3	5.1-6.3-8.7	5.4-6.5-9.2	5.7-7.1-9.8	5.8-7.3-10.1	6.0-7.5-10.5
			Noise Level	<15	<15	17	22	26	31	35	39	40	41	42
450 x 450	18"x18"	0.074 S 0.055 R	L/S (CFM)	212 (449)	268 (568)	320 (678)	373 (790)	425 (900)	480 (1017)	530 (1123)	588 (1246)	640 (1356)	695 (1473)	750 (1589)
			Th. (m)	3.3-4.5-6.3	3.8-4.8-6.8	4.3-5.2-7.3	4.5-5.5-7.5	5.1-6.3-8.0	5.4-6.5-8.8	5.7-7.0-9.7	6.0-7.3-10.3	6.3-7.5-10.6	6.5-7.7-11.1	6.6-8.1-11.5
			Noise Level	<15	19	24	29	34	33	38	40	41	43	45
525 x 525	21"x21"	0.102 S 0.074 R	L/S (CFM)	287 (608)	360 (762)	430 (911)	505 (1070)	575 (1218)	645 (1367)	720 (1526)	792 (1678)	860 (1822)	915 (1940)	1000 (2119)
			Th. (m)	3.7-4.8-6.6	4.1-5.1-7.0	4.6-5.5-7.4	4.7-5.8-7.6	5.3-6.6-9.5	5.6-7.1-10	6.0-7.5-10.3	6-4-7.7-10.9	6.7-8.1-11.5	7.0-8.6-12	7.0-9.0-12.5
			Noise Level	<15	20	24	30	36	38	41	43	45	48	50
600 x 600	24"x24"	0.135 S 0.095 R	L/S (CFM)	375 (795)	470 (996)	560 (1187)	658 (1394)	750 (1589)	843 (1786)	940 (1992)	1031 (2185)	1120 (2373)	1220 (2585)	1312 (2780)
			Th. (m)	4.3-5.1-7.2	4.6-5.5-7.8	4.9-6.1-8.5	5.1-6.3-8.8	5.7-7.3-10	6.1-7.6-10.6	6.7-7.8-11.3	6.9-8.2-11.7	7.2-8.7-12.2	7.4-9.1-12.6	7.6-9.5-13.1
			Noise Level	17	22	27	31	36	39	41	44	46	49	52

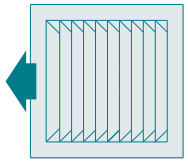

Model 1WS

Tabulated data are subject to the same corrections as in page No. CD-13.

Engineering & Performance Data

Tabular Selection for 4 Way Rectangular Diffusers - Model 4WR

TABLE CD-11

SIZE mm	SIZE Inch	$A_{eff.}$ (m^2)	V_n FPM (m/s) / $\triangle P_t$ Inwg (Pa)	200 (1.0) 0.019 (5)	250 (1.25) 0.031 (8)	300 (1.5) 0.047 (12)	350 (1.75) 0.063 (16)	400 (2.0) 0.082 (21)	450 (2.25) 0.094 (24)	500 (2.5) 0.129 (33)	550 (2.75) 0.141 (36)	600 (3.0) 0.184 (47)	650 (3.25) 0.207 (53)	700 (3.5) 0.250 (64)
225 x 150	9" x 6"	0.009 S 0.008 R	L/S (CFM)	35 (74)	43 (91)	52 (110)	60 (127)	70 (148)	79 (167)	91 (193)	95 (201)	103 (218)	111 (235)	120 (254)
			Thx (m)	0.5-0.8-1.6	0.7-1.0-2.2	0.9-1.1-2.9	1.0-1.3-3.3	1.1-1.6-3.7	1.2-1.9-3.8	1.3-2.1-3.9	1.5-2.4-4.2	1.7-2.8-4.4	1.9-3.2-4.5	2.2-3.4-4.6
			Thy (m)	1.1-1.3-2.6	1.2-1.54-3.9	1.3-1.7-4.2	1.5-2.1-4.3	1.7-2.6-4.4	1.8-3.2-4.6	1.9-3.6-4.8	2.4-3.9-5.2	2.9-4.1-5.4	2.3-4.2-5.6	3.6-4.3-5.9
			Noise Level	<15	<15	15	17	20	23	26	28	31	34	37
300 x 150	12" x 8"	0.011 S 0.010 R	L/S (CFM)	47 (100)	49 (104)	70 (148)	82 (174)	95 (201)	105 (222)	120 (254)	130 (275)	143 (303)	156 (330)	168 (356)
			Thx (m)	0.5-0.8-1.6	0.7-1.0-2.2	0.9-1.1-2.9	1.0-1.3-3.3	1.1-1.6-3.7	1.2-1.9-3.8	1.3-2.1-3.9	1.5-2.4-4.2	1.7-2.8-4.4	1.9-3.2-4.5	2.2-3.4-4.6
			Thy (m)	1.1-1.6-2.9	1.4-1.8-3.5	1.6-1.9-4.3	1.7-2.4-4.5	1.9-2.9-4.9	2.1-3.3-4.1	2.4-3.7-5.2	2.7-3.9-5.7	3.1-4.2-6.1	3.7-4.4-6.3	4.1-4.5-6.4
			Noise Level	<15	<15	16	19	22	25	28	31	34	36	37
375 x 150	15" x 6"	0.016 S 0.014 R	L/S (CFM)	60 (127)	75 (159)	90 (191)	105 (222)	120 (254)	135 (286)	150 (318)	165 (350)	180 (381)	195 (413)	210 (445)
			Thx (m)	0.5-0.8-1.6	0.7-1.0-2.2	0.9-1.1-2.9	1.0-1.3-3.2	1.1-1.6-3.7	1.2-1.9-3.8	1.3-2.1-3.9	1.5-2.4-4.2	1.7-2.8-4.4	1.9-3.2-4.5	2.2-3.4-4.6
			Thy (m)	1.4-1.7-3.2	1.6-2.0-3.8	1.7-2.3-4.4	1.8-2.8-4.7	1.9-3.5-5.1	2.3-3.7-5.3	2.6-4.0-5.5	2.9-4.3-5.8	3.2-4.5-6.1	3.5-4.7-6.4	3.9-4.9-6.6
			Noise Level	<15	<15	16	20	22	26	28	31	34	36	38
450 x 150	18" x 6"	0.020 S 0.017 R	L/S (CFM)	70 (148)	87 (184)	105 (222)	123 (261)	140 (297)	157 (333)	175 (371)	192 (407)	210 (445)	223 (473)	245 (519)
			Thx (m)	0.5-0.8-1.6	0.7-1.0-2.2	0.9-1.1-2.9	1.0-1.3-3.2	1.1-1.6-3.7	1.2-1.9-3.8	1.3-2.1-3.9	1.5-2.4-4.2	1.7-2.8-4.4	1.9-3.2-4.5	2.2-3.4-4.6
			Thy (m)	1.5-1.8-3.3	1.6-2.0-4.0	1.7-2.2-4.7	1.8-2.8-4.8	2.1-3.5-5.1	2.5-3.9-5.4	2.9-4.3-5.8	3.3-4.5-6.0	3.7-4.8-6.2	4.0-5.5-6.5	4.7-6.2-6.9
			Noise Level	<15	<15	16	20	23	27	30	33	35	37	40
300 x 225	12 "x 9"	0.020 S 0.017 R	L/S (CFM)	70 (148)	87 (184)	105 (222)	123 (261)	140 (297)	157 (333)	175 (371)	192 (407)	210 (445)	223 (473)	245 (519)
			Thx (m)	0.8-1.3-2.4	1.2-1.4-2.7	1.4-1.6-3.5	1.5-1.9-4.0	1.6-2.3-4.5	1.7-2.6-4.6	1.9-2.9-4.7	2.1-3.2-5.0	2.3-3.6-5.3	2.6-3.9-5.5	2.9-4.3-5.8
			Thy (m)	1.5-2.1-3.6	1.8-2.2-4.0	2.1-2.3-4.4	2.2-2.4-4.6	2.3-3.6-5.1	2.6-3.9-5.4	2.9-4.3-5.8	3.1-4.6-6.1	3.3-4.9-6.3	4.1-5.5-6.6	4.8-6.5-7.1
			Noise Level	<15	<15	16	20	23	27	30	33	35	37	40
375 x 225	15 "x 9"	0.026 S 0.021 R	L/S (CFM)	87 (184)	110 (233)	131 (278)	156 (331)	177 (375)	199 (422)	220 (466)	243 (515)	265 (562)	287 (608)	310 (657)
			Thx (m)	0.8-1.3-2.4	1.2-1.4-2.7	1.4-1.6-3.5	1.5-1.9-4.0	1.6-2.3-4.5	1.7-2.6-4.6	1.9-2.9-4.7	2.1-3.2-5.0	2.3-3.6-5.3	2.6-3.9-5.5	2.9-4.3-5.8
			Thy (m)	1.6-2.2-3.7	1.8-2.4-4.2	2.2-2.6-4.8	2.3-3.1-5.0	2.4-3.7-5.3	2.7-4.0-5.6	3.0-4.4-5.9	3.2-4.6-6.2	3.5-4.8-6.7	3.9-4.9-7.0	4.3-5.1-7.3
			Noise Level	<15	<15	18	21	24	27	31	34	37	39	41
450 x 225	18 "x 9"	0.031 S 0.025 R	L/S (CFM)	105 (222)	132 (280)	160 (339)	186 (394)	213 (451)	240 (509)	267 (566)	294 (623)	320 (678)	328 (695)	375 (795)
			Thx (m)	0.8-1.3-2.4	1.2-1.4-2.7	1.4-1.6-3.5	1.5-1.9-4.0	1.6-2.3-4.5	1.7-2.6-4.6	1.9-2.9-4.7	2.1-3.2-5.0	2.3-3.6-5.3	2.6-3.9-5.5	2.9-4.3-5.8
			Thy (m)	1.6-2.3-4.1	1.9-2.6-4.5	2.3-2.9-5.2	2.4-3.5-5.5	2.5-4.2-5.6	3.0-4.3-5.8	3.5-4.4-6.2	3.7-4.7-6.5	4.2-5.1-6.9	4.3-5.2-7.2	4.5-5.3-7.4
			Noise Level	<15	<15	18	22	25	28	32	34	37	40	42
525 x 300	21"x12"	0.052 S 0.040 R	L/S (CFM)	163 (345)	205 (434)	252 (534)	290 (615)	330 (699)	374 (793)	415 (879)	460 (975)	500 (1060)	542 (1148)	585 (1240)
			Thx (m)	1.1-1.6-3.3	1.4-2.0-3.8	1.7-2.4-.4.4	1.9-2.8-4.7	2.1-3.3-5.1	2.4-3.6-5.3	2.7-3.9-5.6	3.0-4.2-5.8	3.3-4.5-6.1	3.5-4.7-6.3	3.7-4.9-6.6
			Thy (m)	1.8-2.7-4.4	1.9-3.3-4.8	2.7-3.9-5.3	2.9-4.2-5.9	3.2-4.4-6.2	3.6-4.7-6.6	4.2-5.1-6.9	4.3-5.2-7.1	4.4-5.3-7.4	4.5-5.6-7.7	4.7-6.0-8.1
			Noise Level	<15	<15	18	22	25	29	32	35	38	40	43
450 x 375	18"x15"	0.058 S 0.044 R	L/S (CFM)	178 (377)	222 (470)	265 (562)	310 (657)	355 (752)	400 (848)	445 (943)	487 (1032)	532 (1127)	576 (1221)	620 (1314)
			Thx (m)	1.4-1.9-3.9	1.7-2.4-4.4	2.1-2.9-4.9	2.3-3.4-5.2	2.5-3.9-5.6	2.9-4.1-6.0	3.3-4.3-6.5	3.6-4.5-6.6	3.9-4.8-6.8	4.3-5.0-7.2	4.7-5.3-7.6
			Thy (m)	1.8-2.3-4.4	2.0-2.9-4.9	2.3-3.5-5.4	2.6-4.0-5.7	3.2-4.5-6.0	3.5-4.6-6.4	3.9-4.8-6.8	4.2-5.0-7.2	4.5-5.3-7.4	4.6-5.5-7.6	4.8-5.7-7.8
			Noise Level	<15	<15	18	22	25	29	32	35	38	40	43
525 x 375	21"x15"	0.068 S 0.051 R	L/S (CFM)	205 (434)	257 (545)	309 (655)	361 (765)	412 (873)	465 (985)	517 (1096)	569 (1206)	619 (1312)	673 (1426)	725 (1536)
			Thx (m)	1.4-1.9-3.9	1.7-2.4-4.4	2.1-2.9-4.9	2.3-3.4-5.2	2.5-3.9-5.6	2.9-4.1-6.0	3.3-4.3-6.5	3.6-4.5-6.6	3.9-4.8-6.8	4.3-5.0-7.2	4.7-5.3-7.6
			Thy (m)	1.8-2.6-4.9	2.1-3.2-5.2	2.5-3.9-5.6	3.0-4.3-6.2	3.6-4.7-6.6	3.9-4.8-6.8	4.2-5.1-7.1	4.5-5.4-7.4	4.8-5.7-7.7	4.9-5.8-8.0	5.1-6.0-8.4
			Noise Level	<15	19	21	24	28	31	35	37	39	42	44
525 x 450	21"x18"	0.083 S 0.061 R	L/S (CFM)	247 (523)	309 (655)	370 (784)	433 (918)	495 (1049)	556 (1178)	620 (1314)	680 (1441)	740 (1568)	800 (1695)	865 (1833)
			Thx (m)	1.7-2.3-4.6	2.0-2.9-5.0	2.3-3.6-5.4	2.8-4.2-5.9	3.5-4.6-6.4	3.7-5.0-6.9	4.0-5.5-7.5	4.3-5.6-7.7	4.6-5.7-8.0	4.8-5.2-8.1	4.9-5.8-8.2
			Thy (m)	2.0-2.6-4.9	2.2-3.4-5.3	2.5-4.2-5.7	3.0-4.5-6.2	3.6-4.8-6.7	4.0-5.0-6.9	4.5-5.6-7.6	4.6-5.7-7.8	4.8-5.7-8.2	4.9-6.0-8.4	5.1-6.3-8.7
			Noise Level	<15	19	22	26	29	32	36	38	41	43	46
600 x 450	24"x18"	0.096 S 0.070 R	L/S (CFM)	282 (598)	353 (748)	425 (900)	495 (1050)	567 (1200)	640 (1356)	708 (1500)	781 (1655)	853 (1810)	923 (1955)	995 (2110)
			Thx (m)	1.7-2.3-.4.6	2.0-2.9-5.0	2.3-3.6-5.4	2.8-4.2-5.9	3.5-4.6-6.4	3.7-5.0-6.9	4.0-5.5-7.5	4.3-5.6-7.7	4.6-5.7-8.0	4.8-5.2-8.1	4.9-5.8-8.2
			Thy (m)	2.3-2.9-5.1	2.6-3.6-5.6	2.9-4.4-6.1	3.5-4.8-6.5	4.2-5.1-7.1	4.3-5.2-7.5	4.5-5.3-7.9	4.8-5.6-8.2	5.1-6.1-8.4	5.3-6.3-8.7	5.5-6.6-9.0
			Noise Level	16	19	23	26	29	32	36	39	42	45	48

Tabulated data are subject to the same corrections as in page No. CD-13.

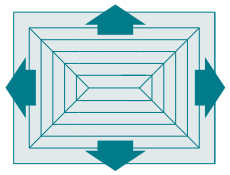

Model 4WR

Engineering & Performance Data

Tabular Selection for 3 Way Rectangular Diffusers - Model 3WR

TABLE CD-12

SIZE mm	SIZE Inch	$A_{eff.}$ (m^2)	V_n FPM (m/s) / $\triangle P_t$ Inwg (Pa)	200 (1.0) 0.019 (5)	250 (1.25) 0.031 (8)	300 (1.5) 0.047 (12)	350 (1.75) 0.063 (16)	400 (2.0) 0.082 (21)	450 (2.25) 0.094 (24)	500 (2.5) 0.129 (33)	550 (2.75) 0.141 (36)	600 (3.0) 0.184 (47)	650 (3.25) 0.207 (53)	700 (3.5) 0.250 (64)
225 x 150	9" x 6"	0.009 S 0.008 R	L/S (CFM)	35 (74)	43 (91)	52 (110)	60 (127)	70 (148)	79 (167)	91 (193)	95 (201)	103 (218)	111 (235)	120 (254)
			Thx (m)	0.5-0.8-1.6	0.7-1.0-2.2	0.9-1.1-2.9	1.0-1.3-3.3	1.1-1.6-3.7	1.2-1.9-3.8	1.3-2.1-3.9	1.5-2.4-4.2	1.7-2.8-4.4	1.9-3.2-4.5	2.2-3.4-4.6
			Thy (m)	1.1-1.3-2.6	1.2-1.5-3.9	1.3-1.7-4.2	1.5-2.1-4.3	1.7-2.6-4.4	1.8-3.2-4.6	1.9-3.6-4.8	2.4-3.9-5.2	2.9-4.1-5.4	2.3-4.2-5.6	3.6-4.3-5.9
			Noise Level	<15	<15	15	17	20	23	26	28	31	34	37
300 x 150	12" x 6"	0.011 S 0.010 R	L/S (CFM)	47 (100)	49 (104)	70 (148)	82 (174)	95 (201)	105 (222)	120 (254)	130 (275)	143 (303)	156 (330)	168 (356)
			Thx (m)	0.5-0.8-1.6	0.7-1.0-2.2	0.9-1.1-2.9	1.0-1.3-3.3	1.1-1.6-3.7	1.2-1.9-3.8	1.3-2.1-3.9	1.5-2.4-4.2	1.7-2.8-4.4	1.9-3.2-4.5	2.2-3.4-4.6
			Thy (m)	1.1-1.6-2.9	1.4-1.8-3.5	1.6-1.9-4.3	1.7-2.4-4.5	1.9-2.9-4.9	2.1-3.3-5.0	2.4-3.7-5.2	2.7-3.9-5.7	3.1-4.2-6.1	3.7-4.4-6.3	4.1-4.5-6.4
			Noise Level	<15	<15	16	19	22	25	28	31	34	36	37
300 x 225	12" x 9"	0.012 S 0.011 R	L/S (CFM)	70 (148)	87 (184)	105 (222)	123 (261)	140 (297)	157 (333)	175 (371)	192 (407)	210 (445)	223 (473)	245 (519)
			Thx (m)	0.8-1.3-2.4	1.2-1.4-2.7	1.4-1.6-3.5	1.5-1.9-4.0	1.6-2.3-4.5	1.2-1.9-3.8	1.3-2.1-3.9	1.5-2.4-4.2	1.7-2.8-4.4	1.9-3.2-4.5	2.2-3.4-4.6
			Thy (m)	1.5-2.1-3.6	1.8-2.2-4.0	2.1-2.3-4.4	2.2-2.4-4.6	2.3-3.6-5.1	2.5-3.9-5.4	2.9-4.3-5.8	3.3-4.5-6.0	3.7-4.8-6.2	4.0-5.5-6.5	4.7-6.2-6.9
			Noise Level	<15	<15	16	20	23	27	30	33	35	37	40
375 x 225	15" x 9"	0.026 S 0.021 R	L/S (CFM)	87 (184)	110 (233)	131 (278)	156 (331)	177 (375)	199 (422)	220 (466)	243 (515)	265 (562)	287 (608)	310 (657)
			Thx (m)	0.8-1.3-2.4	1.2-1.4-2.7	1.4-1.6-3.5	1.5-1.9-4.0	1.6-2.3-4.5	1.7-2.6-4.6	1.9-2.9-4.7	2.1-3.2-5.0	2.3-3.6-5.3	2.6-3.9-5.5	2.9-4.3-5.8
			Thy (m)	1.6-2.2-3.7	1.8-2.4-4.2	2.2-2.6-4.8	2.3-3.1-5.0	2.4-3.7-5.3	2.7-4.0-5.6	3.0-4.4-5.9	3.2-4.6-6.2	3.5-4.8-6.7	3.9-4.9-7.0	4.3-5.1-7.3
			Noise Level	<15	<15	18	21	24	27	31	34	37	39	41
450 x 225	18" x 9"	0.031 S 0.025 R	L/S (CFM)	105 (222)	132 (280)	160 (339)	186 (394)	213 (451)	240 (509)	267 (566)	294 (623)	320 (678)	328 (695)	375 (795)
			Thx (m)	0.8-1.3-2.4	1.2-1.4-2.7	1.4-1.6-3.5	1.5-1.9-4.0	1.6-2.3-4.5	1.7-2.6-4.6	1.9-2.9-4.7	2.1-3.2-5.0	2.3-3.6-5.3	2.6-3.9-5.5	2.9-4.3-5.8
			Thy (m)	1.6-2.3-4.1	1.9-2.6-4.5	2.3-2.9-5.2	2.4-3.5-5.5	2.5-4.2-5.6	3.0-4.3-5.8	3.5-4.4-6.2	3.7-4.7-6.5	4.2-5.1-6.9	4.3-5.2-7.2	4.5-5.3-7.4
			Noise Level	<15	<15	18	22	25	28	32	34	37	40	42
525 x 225	21"x 9"	0.037 S 0.030 R	L/S (CFM)	125 (265)	157 (333)	190 (403)	221 (468)	253 (536)	285 (604)	317 (672)	350 (742)	381 (807)	413 (875)	445 (943)
			Thx (m)	0.8-1.3-2.4	1.2-1.4-2.7	1.4-1.6-3.5	1.5-1.9-4.0	1.6-2.3-4.5	1.7-2.6-4.6	1.9-2.9-4.7	2.1-3.2-5.0	2.3-3.6-5.3	2.6-3.9-5.5	2.9-4.3-5.8
			Thy (m)	1.6-2.2-4.5	1.8-2.7-4.8	2.2-3.5-5.3	2.5-3.9-5.8	3.2-4.5-6.2	3.5-4.7-6.5	3.8-5.1-6.8	4.2-5.2-7.1	4.5-5.3-7.4	4.6-5.4-7.6	4.7-5.6-8.0
			Noise Level	<15	<15	19	22	26	29	33	35	38	40	43
375 x 300	15"x12"	0.037 S 0.029 R	L/S (CFM)	113 (239)	143 (303)	174 (369)	204 (432)	253 (536)	265 (562)	296 (627)	326 (691)	357 (756)	387 (820)	418 (886)
			Thx (m)	1.1-1.6-3.3	1.4-2.0-3.8	1.7-2.4-4.4	1.9-2.8-4.7	2.1-3.3-5.1	2.4-3.6-5.3	2.7-3.9-5.6	3.0-4.2-5.8	3.3-4.5-6.1	3.5-4.7-6.3	3.7-4.9-6.6
			Thy (m)	1.6-2.6-4.5	2.0-3.2-4.8	2.5-3.9-5.3	2.7-4.2-5.6	3.2-4.5-6.2	3.5-4.7-6.5	4.2-5.1-6.9	4.3-5.2-7.1	4.5-5.3-7.4	4.6-5.5-7.6	4.7-5.9-8.0
			Noise Level	<15	15	20	22	26	29	33	35	38	40	43
450 x 300	18"x12"	0.044 S 0.035 R	L/S (CFM)	140 (297)	175 (371)	210 (445)	245 (519)	280 (593)	315 (667)	350 (742)	385 (816)	420 (890)	455 (964)	490 (1038)
			Thx (m)	1.1-1.6-3.3	1.4-2.0-3.8	1.7-2.4-4.4	1.9-2.8-4.7	2.1-3.3-5.1	2.4-3.6-5.3	2.7-3.9-5.6	3.0-4.2-5.8	3.3-4.5-6.1	3.5-4.7-6.3	3.7-4.9-6.6
			Thy (m)	1.6-2.6-4.5	1.9-3.0-4.8	2.5-3.5-5.3	2.7-4.0-5.6	3.2-4.5-6.0	3.5-4.6-6.4	3.9-4.8-6.9	4.2-5.1-7.2	4.5-5.4-7.2	4.6-5.5-7.7	4.7-5.6-7.9
			Noise Level	<15	16	20	23	27	30	33	36	39	41	44
450 x 375	18"x15"	0.058 S 0.044 R	L/S (CFM)	178 (377)	222 (470)	265 (562)	310 (657)	355 (752)	400 (848)	445 (943)	487 (1032)	532 (1127)	576 (1221)	620 (1314)
			Thx (m)	1.4-1.9-3.9	1.7-2.4-4.4	2.1-2.9-4.9	2.3-3.4-5.2	2.5-3.9-5.6	2.9-4.1-6.0	3.3-4.3-6.5	3.6-4.5-6.6	3.9-4.8-6.8	4.3-5.0-7.2	4.7-5.3-7.6
			Thy (m)	1.8-2.3-4.4	2.0-2.9-4.9	2.3-3.5-5.4	2.6-4.0-5.7	3.2-4.5-6.0	3.5-4.6-6.4	3.9-4.8-6.8	4.2-5.0-7.2	4.5-5.3-7.4	4.6-5.5-7.6	4.8-5.7-7.8
			Noise Level	<15	<15	18	22	25	29	32	35	38	40	43
525 x 375	21"x15"	0.068 S 0.051 R	L/S (CFM)	205 (434)	257 (545)	309 (655)	361 (765)	412 (873)	465 (985)	517 (1096)	569 (1206)	619 (1312)	673 (1426)	725 (1536)
			Thx (m)	1.4-1.9-3.9	1.7-2.4-4.4	2.1-2.9-4.9	2.3-3.4-5.2	2.5-3.9-5.6	2.9-4.1-6.0	3.3-4.3-6.5	3.6-4.5-6.6	3.9-4.8-6.8	4.3-5.0-7.2	4.7-5.3-7.6
			Thy (m)	1.8-2.6-4.9	2.1-3.2-5.2	2.5-3.9-5.6	3.0-4.3-6.2	3.6-4.7-6.6	3.9-4.8-6.8	4.2-5.1-7.1	4.5-5.4-7.4	4.8-5.7-7.7	4.9-5.8-8.0	5.1-6.0-8.4
			Noise Level	<15	19	21	24	28	31	35	37	39	42	44
525 x 450	21"x18"	0.083 S 0.061 R	L/S (CFM)	247 (523)	309 (655)	370 (784)	433 (918)	495 (1049)	556 (1178)	620 (1314)	680 (1441)	740 (1568)	800 (1695)	865 (1833)
			Thx (m)	1.7-2.3-4.6	2.0-2.9-5.0	2.3-3.6-5.4	2.8-4.2-5.9	3.5-4.6-6.4	3.7-5.0-6.9	4.0-5.5-7.5	4.3-5.6-7.7	4.6-5.7-8.0	4.8-5.2-8.1	4.9-5.8-8.2
			Thy (m)	2.0-2.6-4.9	2.2-3.4-5.3	2.5-4.2-5.7	3.0-4.5-6.2	3.6-4.8-6.7	4.0-5.0-6.9	4.5-5.6-7.6	4.6-5.7-7.8	4.8-5.8-8.2	4.9-6.0-8.4	5.1-6.3-8.7
			Noise Level	<15	19	22	26	29	32	36	38	41	43	46
600 x 450	24"x18"	0.096 S 0.070 R	L/S (CFM)	282 (598)	353 (748)	425 (900)	495 (1050)	567 (1200)	640 (1356)	708 (1500)	781 (1655)	853 (1810)	923 (1955)	995 (2110)
			Thx (m)	1.7-2.3-.4.6	2.0-2.9-5.0	2.3-3.6-5.4	2.8-4.2-5.9	3.5-4.6-6.4	3.7-5.0-6.9	4.0-5.5-7.5	4.3-5.6-7.7	4.6-5.7-8.0	4.8-5.8-8.1	4.9-5.9-8.2
			Thy (m)	2.3-2.9-5.1	2.6-3.6-5.6	2.9-4.4-6.1	3.5-4.8-6.5	4.2-5.1-7.1	4.3-5.2-7.5	4.5-5.3-7.9	4.8-5.6-8.2	5.1-6.1-8.4	5.3-6.3-8.7	5.5-6.6-9.0
			Noise Level	16	19	23	26	29	32	36	39	42	45	48

Tabulated data are subject to the same corrections as in page No. CD-13.

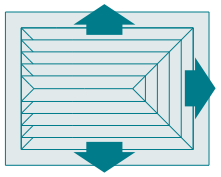

Model 3WR

Engineering & Performance Data

Tabular Selection for 2 Way Rectangular Diffusers - Model 2WR-H and 2WR-V

TABLE CD-13

SIZE mm	SIZE Inch	$A_{eff.}$ (m^2)	V_n FPM (m/s) / $\triangle P_t$ Inwg (Pa)	200 (1.0) 0.019 (5)	250 (1.25) 0.031 (8)	300 (1.5) 0.047 (12)	350 (1.75) 0.063 (16)	400 (2.0) 0.082 (21)	450 (2.25) 0.094 (24)	500 (2.5) 0.129 (33)	550 (2.75) 0.141 (36)	600 (3.0) 0.184 (47)	650 (3.25) 0.207 (53)	700 (3.5) 0.250 (64)
225 x 150	9" x 6"	0.010 S 0.009 R	L/S (CFM)	35 (74)	43 (91)	52 (110)	60 (127)	70 (148)	79 (167)	91 (193)	95 (201)	103 (218)	111 (235)	120 (254)
			Th. (m)	0.8-1.6-3.7	1.1-2.0-3.8	1.4-2.5-4.0	1.7-2.9-4.3	2.1-3.6-4.5	2.2-3.7-4.6	2.3-3.8-4.8	2.7-3.9-5.1	3.3-4.0-5.8	3.4-4.1-6.0	3.5-4.2-6.3
			Noise Level	<15	<15	15	17	20	23	26	28	31	34	37
300 x 150	12"x 8"	0.014 S 0.010 R	L/S (CFM)	47 (100)	49 (104)	70 (148)	82 (174)	95 (201)	105 (222)	120 (254)	130 (275)	143 (303)	156 (330)	168 (356)
			Th. (m)	1.1-1.7-3.7	1.3-2.2-3.9	1.6-2.6-4.2	1.8-3.0-4.6	2.2-3.6-5.1	2.4-3.8-5.3	2.6-4.2-5.6	3.0-4.3-5.8	3.5-4.4-6.2	3.6-4.5-6.4	3.8-4.6-6.7
			Noise Level	<15	<15	16	19	22	25	28	31	34	36	37
375 x 150	15"x 6"	0.018 S 0.015 R	L/S (CFM)	60 (127)	75 (159)	90 (191)	105 (222)	120 (254)	135 (286)	150 (318)	165 (350)	180 (381)	195 (413)	210 (445)
			Th. (m)	1.2-2.1-4.0	1.6-2.5-4.2	2.1-3.0-4.5	2.3-3.5-4.8	2.6-4.0-5.3	2.7-4.1-5.6	2.9-4.3-6.1	3.3-4.4-6.3	3.7-4.5-6.5	3.8-4.6-6.7	3.9-4.8-7.1
			Noise Level	<15	<15	16	20	22	26	28	31	34	36	38
450 x 150	18"x 6"	0.022 S 0.019 R	L/S (CFM)	70 (148)	87 (184)	105 (222)	123 (261)	140 (297)	157 (333)	175 (371)	192 (407)	210 (445)	223 (473)	245 (519)
			Th. (m)	1.2-2.1-3.9	1.6-2.5-4.4	2.1-3.0-4.9	2.4-3.5-5.2	2.7-4.0-5.6	2.9-4.2-5.9	3.2-4.5-6.3	3.5-4.6-6.5	3.9-4.7-6.9	4.0-4.9-7.1	4.1-5.1-7.4
			Noise Level	<15	<15	16	20	23	27	30	33	35	37	40
300 x 225	12"x 9"	0.022 S 0.019 R	L/S (CFM)	70 (148)	87 (184)	105 (222)	123 (261)	140 (297)	157 (333)	175 (371)	192 (407)	210 (445)	223 (473)	245 (519)
			Th. (m)	1.3-2.2-4.0	1.6-2.6-4.4	2.2-3.1-4.9	2.5-3.5-5.3	2.8-4.1-5.7	3.1-4.3-6.0	3.3-4.6-6.4	3.6-4.7-6.6	3.9-4.8-7.1	4.0-5.0-7.3	4.2-5.2-7.5
			Noise Level	<15	<15	16	20	23	27	30	33	35	37	40
375 x 225	15"x 9"	0.028 S 0.023 R	L/S (CFM)	87 (184)	110 (233)	131 (278)	156 (331)	177 (375)	199 (422)	220 (466)	243 (515)	265 (562)	287 (608)	310 (657)
			Th. (m)	1.4-2.3-4.2	1.7-2.7-4.5	2.3-3.2-5.1	2.6-3.7-5.5	2.9-4.3-5.9	3.2-4.4-6.3	3.6-4.7-6.7	3.8-4.8-6.8	4.1-5.1-7.1	4.2-5.2-7.4	4.4-5.3-7.7
			Noise Level	<15	<15	18	21	24	27	31	34	37	39	41
450 x 225	18"x 9"	0.034 S 0.026 R	L/S (CFM)	105 (222)	132 (280)	160 (339)	186 (394)	213 (451)	240 (509)	267 (566)	294 (623)	320 (678)	328 (695)	375 (795)
			Th. (m)	1.6-2.4-4.4	1.9-2.9-4.7	2.3-3.5-5.3	2.7-4.0-5.5	3.2-4.5-6.0	3.5-4.6-6.4	3.9-4.7-6.8	4.2-5.0-7.1	4.5-5.3-7.5	4.6-5.5-7.7	4.8-5.6-8.1
			Noise Level	<15	<15	18	22	25	28	32	34	37	40	42
525 x 225	21"x 9"	0.040 S 0.032 R	L/S (CFM)	125 (265)	157 (333)	190 (403)	221 (468)	253 (536)	285 (604)	317 (672)	350 (742)	381 (807)	413 (875)	445 (943)
			Th. (m)	1.6-2.5-4.5	2.0-3.2-5.0	2.5-3.9-5.6	3.0-4.1-5.9	3.5-4.4-6.3	3.7-4.7-6.6	4.1-5.0-7.1	4.3-5.3-7.4	4.5-5.6-7.9	4.6-5.7-8.1	4.8-5.9-8.3
			Noise Level	<15	<15	19	22	26	29	33	35	38	40	43
375 x 300	15"x12"	0.039 S 0.030 R	L/S (CFM)	113 (239)	143 (303)	174 (369)	204 (432)	235 (498)	265 (562)	296 (627)	326 (691)	357 (756)	387 (820)	418 (886)
			Th. (m)	1.6-2.5-4.4	2.0-3.1-4.8	2.5-3.6-5.3	2.8-4.1-5.7	3.3-4.5-6.2	3.6-4.7-7.0	3.9-5.1-7.8	4.2-5.2-7.9	4.5-5.3-8.1	4.6-5.5-8.2	4.8-5.7-8.3
			Noise Level	<15	15	20	22	26	29	33	35	38	40	43
450 x 300	18"x12"	0.047 S 0.037 R	L/S (CFM)	140 (297)	175 (371)	210 (445)	245 (519)	280 (593)	315 (667)	350 (742)	385 (816)	420 (890)	455 (964)	490 (1038)
			Th. (m)	1.9-2.6-4.7	2.2-3.5-5.1	2.5-4.2-5.6	3.0-4.4-6.0	3.5-4.6-6.5	4.0-5.1-6.8	4.5-5.4-7.2	4.6-5.5-7.7	4.8-5.7-8.3	4.9-6.0-8.4	5.1-6.3-8.6
			Noise Level	<15	15	20	22	26	30	33	36	39	41	44
525 x 300	21"x12"	0.056 S 0.043 R	L/S (CFM)	163 (345)	205 (434)	252 (534)	290 (615)	330 (699)	374 (793)	415 (879)	460 (975)	500 (1060)	542 (1148)	585 (1240)
			Th. (m)	2.1-2.8-4.8	2.7-3.5-5.3	3.1-4.1-5.8	3.5-4.4-6.4	3.9-4.7-7.0	4.2-5.1-7.2	4.5-5.4-7.5	4.6-5.7-7.8	4.8-6.0-8.3	5.1-6.2-8.7	5.5-6.4-9.1
			Noise Level	<15	16	20	24	27	31	34	37	40	42	45

Tabulated data are subject to the same corrections as in page No. CD-13.

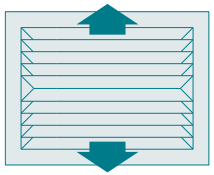

Model 2WR-H

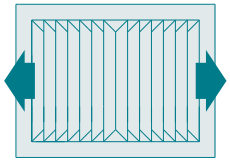

Model 2WR-V

Engineering & Performance Data

Tabular Selection for 1 Way Rectangular Diffusers - Model 1WR-H and 1WR-V

TABLE CD-14

SIZE mm	SIZE Inch	$A_{eff.}$ (m^2)	V_n FPM (m/s) / ΔP_t Inwg (Pa)	200 (1.0) / 0.019 (5)	250 (1.25) / 0.031 (8)	300 (1.5) / 0.047 (12)	350 (1.75) / 0.063 (16)	400 (2.0) / 0.082 (21)	450 (2.25) / 0.094 (24)	500 (2.5) / 0.129 (33)	550 (2.75) / 0.141 (36)	600 (3.0) / 0.184 (47)	650 (3.25) / 0.207 (53)	700 (3.5) / 0.250 (64)
225 x 150	9" x 6"	0.010 S 0.009 R	L/S (CFM)	35 (74)	43 (91)	52 (110)	60 (127)	70 (148)	79 (167)	91 (193)	95 (201)	103 (218)	111 (235)	120 (254)
			Th. (m)	1.1-1.6-4.2	1.3-2.5-4.3	1.6-3.7-4.6	2.3-3.9-5.0	3.2-4.1-5.5	3.4-4.2-5.6	3.6-4.3-6.2	3.8-4.4-6.3	4.1-4.8-6.5	4.2-5.0-6.8	4.3-5.3-7.2
			Noise Level	<15	<15	15	17	20	23	26	28	31	34	37
300 x 150	12"x 8"	0.014 S 0.010 R	L/S (CFM)	47 (100)	49 (104)	70 (148)	82 (174)	95 (201)	105 (222)	120 (254)	130 (275)	143 (303)	156 (330)	168 (356)
			Th. (m)	1.4-1.9-4.5	1.7-2.4-4.7	2.1-3.9-5.0	2.7-4.2-5.5	3.6-4.5-6.0	3.7-4.6-6.5	3.9-4.7-7.0	4.2-4.8-7.1	4.5-5.0-7.3	4.6-5.3-7.5	4.7-5.7-7.9
			Noise Level	<15	<15	16	19	22	25	28	31	34	36	37
375 x 150	15"x 6"	0.018 S 0.015 R	L/S (CFM)	60 (127)	75 (159)	90 (191)	105 (222)	120 (254)	135 (286)	150 (318)	165 (350)	180 (381)	195 (413)	210 (445)
			Th. (m)	1.6-2.4-4.7	1.9-3.2-5.1	2.3-4.1-5.4	2.9-4.4-5.8	3.6-4.7-6.3	3.8-4.8-6.6	3.9-4.9-7.2	4.3-5.1-7.3	4.7-5.4-7.5	4.8-5.6-7.7	4.9-6.0-8.1
			Noise Level	<15	<15	16	20	22	26	28	31	34	36	38
450 x 150	18"x 6"	0.022 S 0.019 R	L/S (CFM)	70 (148)	87 (184)	105 (222)	123 (261)	140 (297)	157 (333)	175 (371)	192 (407)	210 (445)	223 (473)	245 (519)
			Th. (m)	1.7-2.5-4.7	2.1-3.3-5.1	2.5-4.1-5.6	3.2-4.4-6.1	3.9-4.8-6.6	4.0-4.9-7.0	4.1-5.0-7.5	4.5-5.3-7.6	4.9-5.7-7.8	5.0-6.0-8.1	5.1-6.3-8.5
			Noise Level	<15	<15	16	20	23	27	30	33	35	37	40
300 x 225	12"x 9"	0.022 S 0.019 R	L/S (CFM)	70 (148)	87 (184)	105 (222)	123 (261)	140 (297)	157 (333)	175 (371)	192 (407)	210 (445)	223 (473)	245 (519)
			Th. (m)	1.8-2.5-4.8	2.2-3.3-5.2	2.6-4.2-5.7	3.2-4.5-6.2	3.9-4.8-6.6	4.0-4.9-7.1	4.2-5.1-7.6	4.6-5.4-7.7	5.0-5.8-7.9	5.1-6.2-8.2	5.2-6.4-8.6
			Noise Level	<15	<15	16	20	23	27	30	33	35	37	40
375 x 225	15"x 9"	0.028 S 0.023 R	L/S (CFM)	87 (184)	110 (233)	131 (278)	156 (331)	177 (375)	199 (422)	220 (466)	243 (515)	265 (562)	287 (608)	310 (657)
			Th. (m)	1.9-2.9-5.1	2.3-3.6-5.4	2.8-4.4-5.9	3.4-4.8-6.4	4.1-5.1-6.9	4.3-5.2-7.3	4.5-5.4-7.8	4.7-5.7-8.1	5.1-6.0-8.4	5.2-6.3-8.6	5.3-6.6-9.0
			Noise Level	<15	<15	18	21	24	27	31	34	37	39	41
450 x 225	18"x 9"	0.034 S 0.026 R	L/S (CFM)	105 (222)	132 (280)	160 (339)	186 (394)	213 (451)	240 (509)	267 (566)	294 (623)	320 (678)	328 (695)	375 (795)
			Th. (m)	2.3-3.3-5.1	2.7-3.9-5.7	3.3-4.5-6.3	3.7-4.9-6.7	4.2-5.1-7.2	4.5-5.4-7.6	4.8-5.7-8.1	4.9-5.9-8.2	5.1-6.3-8.4	5.3-6.6-9.0	5.6-6.9-9.7
			Noise Level	<15	<15	18	22	25	28	32	34	37	40	42
525 x 225	21"x 9"	0.040 S 0.032 R	L/S (CFM)	125 (265)	157 (333)	190 (403)	221 (468)	253 (536)	285 (604)	317 (672)	350 (742)	381 (807)	413 (875)	445 (943)
			Th. (m)	2.4-3.5-5.3	3.0-4.1-5.8	3.5-4.7-6.5	3.9-5.0-6.9	4.4-5.4-7.4	4.7-5.7-7.8	5.0-6.0-8.3	5.1-6.2-8.5	5.3-6.5-8.9	5.4-6.7-9.4	5.6-7.1-10
			Noise Level	<15	<15	19	22	26	29	33	35	38	40	43
375 x 300	15"x12"	0.039 S 0.030 R	L/S (CFM)	113 (239)	143 (303)	174 (369)	204 (432)	235 (498)	265 (562)	296 (627)	326 (691)	357 (756)	387 (820)	418 (886)
			Th. (m)	2.4-3.5-5.3	2.9-4.0-5.7	3.5-4.7-6.3	3.9-5.0-6.8	4.4-5.4-7.4	4.5-5.6-7.8	4.8-5.7-8.3	5.1-5.9-8.6	5.3-6.2-8.9	5.4-6.5-9.3	5.6-6.9-9.8
			Noise Level	<15	15	20	22	26	29	33	35	38	40	43
450 x 300	18"x12"	0.047 S 0.037 R	L/S (CFM)	140 (297)	175 (371)	210 (445)	245 (519)	280 (593)	315 (667)	350 (742)	385 (816)	420 (890)	455 (964)	490 (1038)
			Th. (m)	2.5-3.9-5.7	3.2-4.3-6.2	3.9-4.8-6.9	4.1-5.2-7.4	4.4-5.7-7.9	4.7-5.9-8.3	5.1-6.2-8.7	5.4-6.6-9.0	5.8-7.0-9.4	5.9-7.1-9.8	6.0-7.2-10.4
			Noise Level	<15	15	20	22	26	30	33	36	39	41	44
525 x 300	21"x12"	0.056 S 0.043 R	L/S (CFM)	163 (345)	205 (434)	252 (534)	290 (615)	330 (699)	374 (793)	415 (879)	460 (975)	500 (1060)	542 (1148)	585 (1240)
			Th. (m)	3.0-4.3-5.7	3.7-4.7-6.2	4.2-5.2-6.9	4.5-5.3-7.4	4.8-5.7-8.0	5.1-6.1-8.5	5.5-6.4-9.0	5.6-6.7-9.5	5.8-7.0-10.1	6.1-7.2-10.4	6.4-7.5-10.7
			Noise Level	<15	16	20	24	27	31	34	37	40	42	45

Tabulated data are subject to the same corrections as in page No. CD-13.

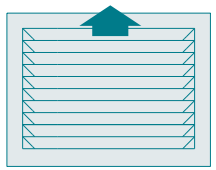

Model 1WR-H

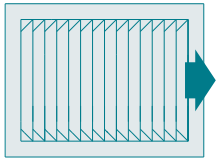

Model 1WR-V

LOUVRED FACE, MULTI DIRECTIONAL WITH REMOVABLE CORE

Ordering Data

- **Available Surface Finishes For Diffusers :**
  - Natural / Matt Silver Anodized .
  - Powder Coating (Standard Colors are white RAL 9010 / 9016, other optional colors if required to be provided in RAL - No. only and charged extra).
  - Aluminium in Mill Finish.
  - Other Special Finishes (on request if available).
- **Available Surface Finishes For Opposed Blade Dampers & Equalizing Grids :**
  - Aluminium in Mill Finish (standard).
  - Matt Black Powder Coating (optional).
- **Ordering Specifications :**

Specify :

1 . Diffuser Description (Supply, Return, Extract, Exhaust, Dummy, Fresh Air , ...etc.).
2 . Model / Type (Specify Pattern Arrangement).
3 . Shape (Square or Rectangular).
4 . Opposed Blade Damper Surface Finish (only mention if required in Black color).
5 . Nominal / Neck size.
6 . Quantity.
7 . Diffuser Surface Finish.
8 . RAL - No. (only mention if powder coating surface finish is required).
9 . Optional Accessories (Equalizing Grid, Gasket, Adaptor,..... or others).

Example 1 :

1	2	3	4	5	6	7	8	9
SAD	4W	S	BD	12" x 12" 300 x 300 (mm)	10	Powder Coating	9016	With Rubber Gasket

Example 2 :

1	2	3	4	5	6	7	8	9
SAD	3W	R	–	18" x 9" 450 x 225 (mm)	5	Silver Anodized	–	–

Example 3 :

1	2	3	4	5	6	7	8	9
RAD	4W	S	–	18" x 18" 450 x 450 (mm)	15	Powder Coating	7045 (Optional)	–

BEST CHOICE INDUSTRIES L.L.C.

MANUFACTURING CENTRAL AIR CONDITIONING AIR OUTLETS

Tel. : 04 - 88 55 422, Fax : 04 - 88 55 421, P.O. Box: 31567, Dubai - U. A. E. - E-mail: bcillc@emirates.net.ae

CHAPTER 2

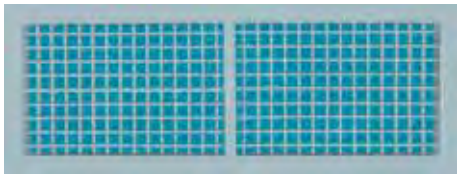

GRILLES AND REGISTERS

CHAPTER-2

GRILLES AND REGISTERS

This type of air outlets are the most desirable for the side wall locations. Since they are available with both horizontal and vertical adjustable blades, minor air motion problems can be simply corrected by adjusting the vanes. They are distinguished by their high construction quality, low pressure drops and contained sound levels. Blades can be singularly oriented.

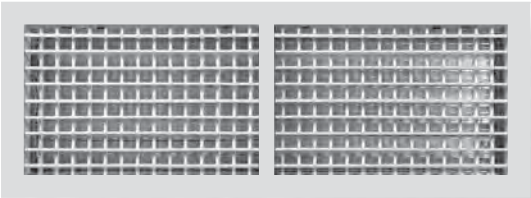

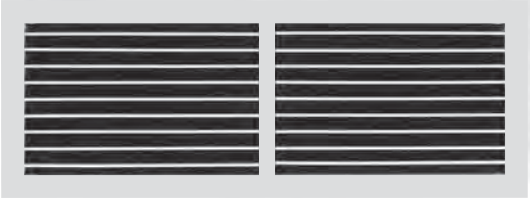

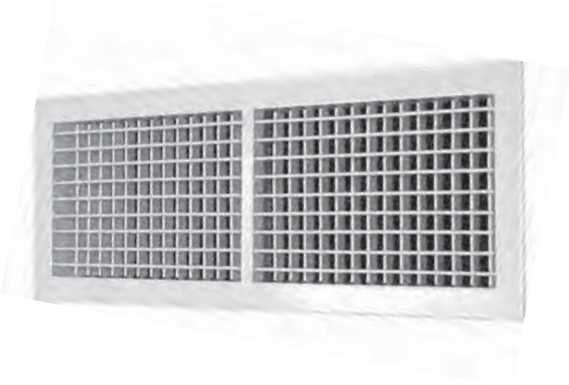

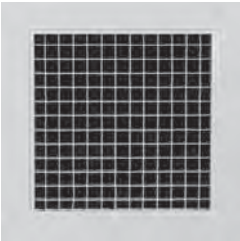

Features & Characteristics :

- Construction : Frame & blades are made of high quality Extruded Aluminium Profiles of 6063 Alloy.
- Frame Flange width : 30 mm.
- Blades : Aerofoil design with 20 mm center spacing as standard.
- The frame is assembled by punching it's four corners by means of G. I. Angles which together create a very robust construction.
- Available in wide variety of standard neck sizes ranging from 300 x 150 up to 1200 x 300 mm in 50 mm increments (other None-Standard sizes are available on request).
- Both the Grilles and Registers are available in single or double blades deflection on which provides air deflection in horizontal and / or vertical planes.
- Blades are individually adjustable to any degree of deflection by hand without the use of special tools.
- Maximum effective areas can be obtained when the blades are setted at 0 ° deflection.
- Blades are separated from it's frame by nylon bushes. This method of assembly provides maximum rattle-free performance and eliminates corrosion.
- A large free effective area grilles can be obtained by using an Eggcrate core with 90% Free Area, see page No. GR-09.
- Grilles combined with Opposed Blade Dampers are called Registers.
- Accessories : see page No. GR-10 & 11.
- Available Fixing Mounting : see page No. GR-12.
- Surface Finishes : see page No. GR-34.

Models Available :

TABLE GR - 01

Grilles / Registers Model	Single Deflection Blades	Double Deflection Blades	Horizontal or Vertical Blades	Horizontal or Vertical Front Blades	Opposed Blade Damper	Fixed Blades at 45° Angle
SAR		●		●	●	
SAG		●		●		
RAR , EAR	●		●		●	
RAG , EAG	●		●			●

● Available.

TABLE GR-02

OPERATING RANGE & QUICK SELECTION TABLE FOR DOUBLE DEFLECTION GRILLES/REGISTERS							
Nominal Size		CFM Range		Nominal Size		CFM Range	
Inch	mm			Inch	mm		
12" x 6"	300 X 150	190	460	12"x10"	300 X 250	315	725
16" x 6"	400 X 150	270	625	16"x10"	400 X 250	425	970
18" x 6"	450 X 150	300	650	18"x10"	450 X 250	480	1060
20" x 6"	500 X 150	315	725	20"x10"	500 X 250	540	1200
24" x 6"	600 X 150	400	900	24"x10"	600 X 250	610	1400
30" x 6"	750 X 150	450	1025	30"x10"	750 X 250	850	2050
36" x 6"	900 X 150	550	1250	36"x10"	900 X 250	1000	2200
40" x 6"	1000X150	610	1400	40"x10"	1000X 250	1090	2350
48" x 6"	1200X150	700	1600	48"x10"	1200X250	1200	2500
12" x 8"	300 X 200	325	725	12"x12"	300 X 300	390	850
16" x 8"	400 X 200	350	760	16"x12"	400 X 300	525	1160
18" x 8"	450 X 200	390	850	18"x12"	450 X 300	560	1250
20" x 8"	500 X 200	425	950	20"x12"	500 X 300	640	1440
24" x 8"	600 X 200	500	1100	24"x12"	600 X 300	675	1550
30" x 8"	750 X 200	610	1400	30"x12"	750 X 300	870	2000
36" x 8"	900 X 200	675	1550	36"x12"	900 X 300	1070	2350
40" x 8"	1000 X200	800	1900	40"x12"	1000 X300	1200	2500
48" x 8"	1200X 200	900	2150	48"x12"	1200 X300	1350	3100

- CFM Values are based on Noise Level ranging from 15-35 (dB).
- Tabulated data are for Double Deflection Grilles/Registers of Horizontal or Vertical Front Blades.

TABLE GR-03

RECOMMENDED OUTLET VELOCITIES		
APPLICATION	TERMINAL VELOCITY	
	FPM	m/s
Broadcast studios	300-500	1.5-2.5
Residences	500-750	2.5-3.7
Apartments	500-750	2.5-3.7
Mosques and Churches	500-750	2.5-3.7
Hotel bedrooms	500-750	2.5-3.7
Theaters	500-750	2.5-3.7
Private offices, acoustically treated	500-750	2.5-3.7
Private offices, not treated	500-800	2.5-4.0
Motion picture theaters	1000	5.0
General offices	1000-1250	5.0-6.2
Dept. stores, upper floors	1500	7.5
Dept. stores, main floors	2000	10

Important Principles to Know :

- **Throw** : is the horizontal distance that an air stream travels on leaving an outlet. This distance is measured from the outlet to a point at which the velocity of the air stream has reached a definite minimum value.
- **Drop** : is the vertical distance the air moves between the time it leaves the outlet and the time it reaches the end of its throw.
- **Spread** : is the angle of divergence of the air stream after it leaves the outlet. Horizontal spread is divergence in the horizontal plane and vertical spread is divergence in the vertical plane. Spread is the included angle measured in degrees.

Engineering Notes :

- From the selection diagrams/tables the size of the Grille / Register can be selected taking into consideration the throw, velocity, pressure loss and noise level for it.
- Generally, to prevent over blow, throw should be selected 75 % of the distance to the wall opposite, or if the outlets are opposed to one another this should be one third of the distance between them.
- When the throw is more than 75 % of the distance to the wall opposite, divide the air flow over several outlets to reduce the throw.
- The minimum Grille / Register height from the floor level is determined by the drop of the selected outlet +1.8 mtr.
- Air passing through a properly selected Grille / Register will not add any appreciable noise to the sound level of the existing system.
- To obtain long throw and narrow air pattern, use a blades deflection between 0 ° & 15 ° angle. And for shorter throw and wide air pattern use up to 45 ° angle of deflection.
- Outlets with blades set at a straight angle result in a spread of approximately 19 ° in both the horizontal and vertical plane.
- Outlets with converging blades set to direct the discharge air result in approximately the same spread as when the blades are set straight. However the resulting throw is approximately 15 % longer than the same for straight blades setting.
- Diverging blades into 22 $^1/_2$ ° angle as shown below result in a throw with approximately 20 % less than the throw of straight blades setting. Also diverging blades into 45 ° angle as shown result in spread included angle of approximately 60 ° and a throw with approximately 50 % less than the throw of straight blades setting.
- To obtain better air mixing, decrease the throw and increase the spread and induction by deflecting the blades toward maximum recommended angle of deflection (Angle ≤ 45 °).
- The spread in Double Deflection Grilles / Registers can be adjusted in horizontal and vertical planes.
- If the Opposed Blade Damper is used with the grille outlet, the effective area will be reduced approximately by 5 % which it's effect on throw & pressure drop is negligible.

Influence of Blades Deflection on Outlet Performance :

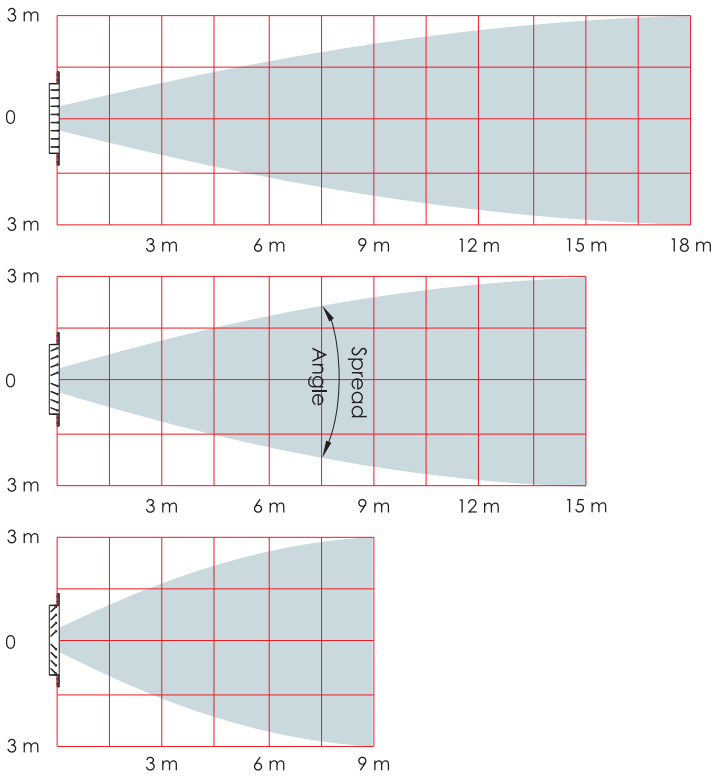

0 ° Deflection
(Straight Blades)

22 1/2 ° Deflection
(Diverging Blades)

45 ° Deflection
(Diverging Blades)

Double Deflection Registers
Construction and Dimensional Details

Model SAR HFB DD

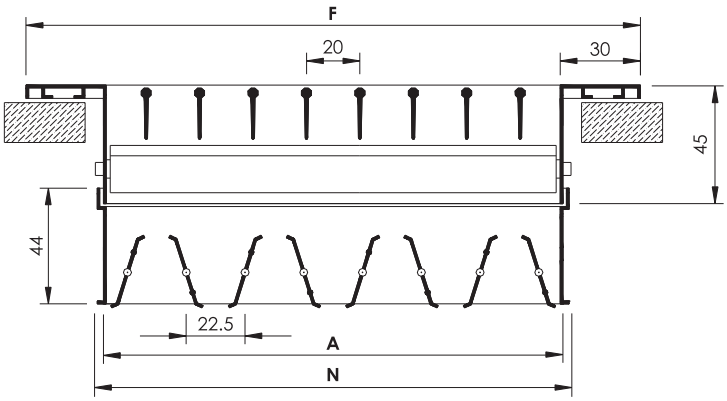

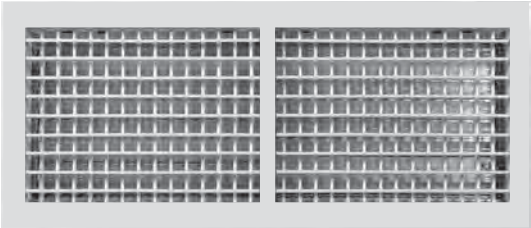

Front Blades Mounting : Horizontal

Model SAR VFB DD

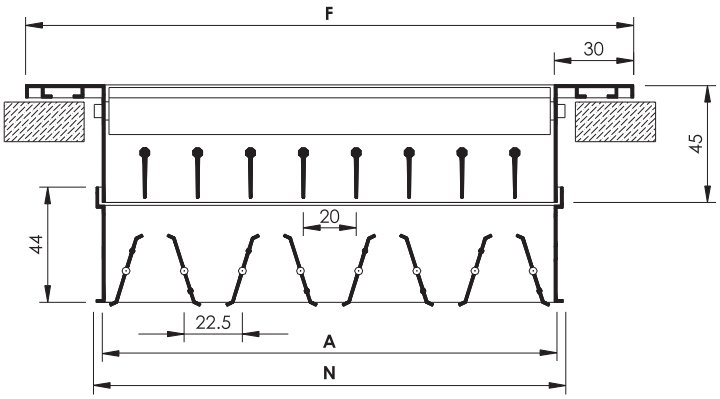

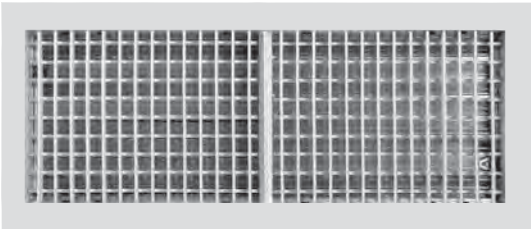

Front Blades Mounting : Vertical

- **SAR** : is Supply Air Register, Double Deflection Blades c/w Opposed Blade Damper.
- Registers called Supply Air Register and coded as **SAR** are always equipped with Opposed Blade Damper (provided as standard).

N : Nominal/Listed Size = Length (L) x Height (H)
A : Actual Size = (L-10) x (H-10)
F : Face Size = (L+50) x (H+50)

- Registers furnished approximately 10 mm less than the Nominal/Listed Size.
- All dimensions are in mm and subject to ±1 mm tolerance.

Double Deflection Grilles
Construction and Dimensional Details

Model SAG HFB DD

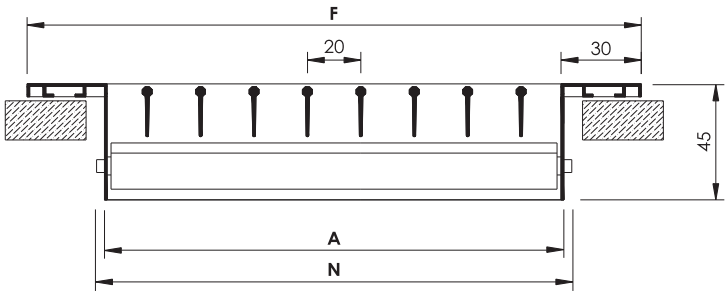

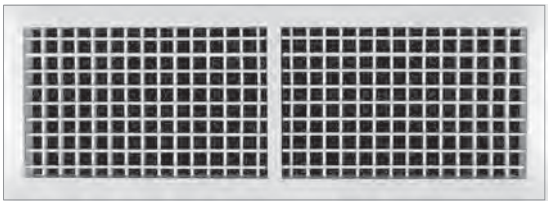

Front Blades Mounting : Horizontal

Model SAG VFB DD

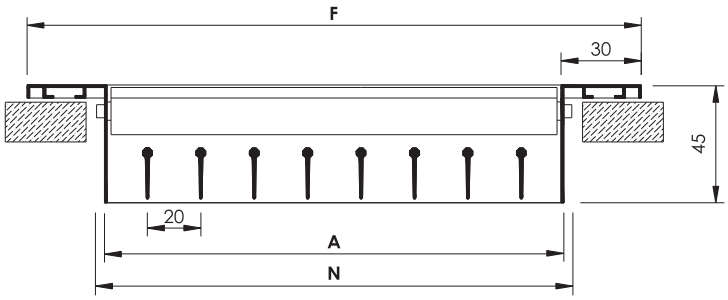

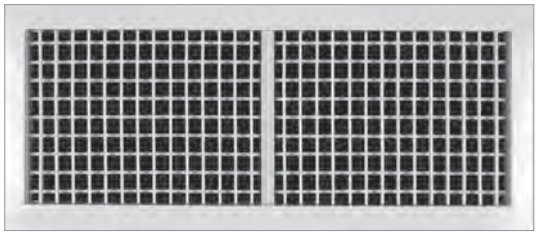

Front Blades Mounting : Vertical

- **SAG** : is Supply Air Grille, Double Deflection Blades w/o Opposed Blade Damper.
- Grilles called Supply Air Grille and coded as **SAG** are usually supplied w/o Opposed Blade Damper.

N : Nominal/Listed Size = Length (L) x Height (H)
A : Actual Size = (L-10) x (H-10)
F : Face Size = (L+50) x (H+50)

- Grilles furnished approximately 10 mm less than the Nominal/Listed Size.
- All dimensions are in mm and subject to ±1 mm tolerance.

Single Deflection Registers
Construction and Dimensional Details

Model RAR HB SD or EAR HB SD

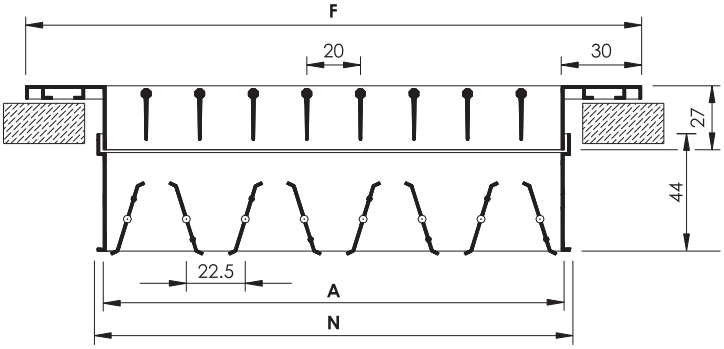

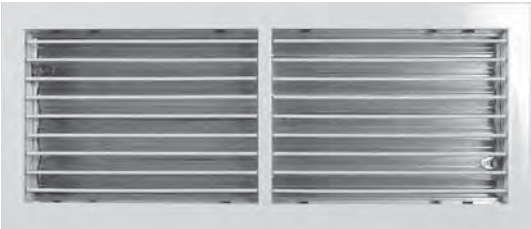

Blades Mounting : Horizontal

Model RAR VB SD or EAR VB SD

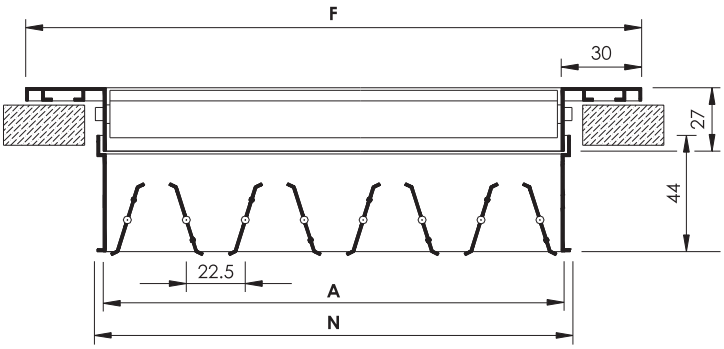

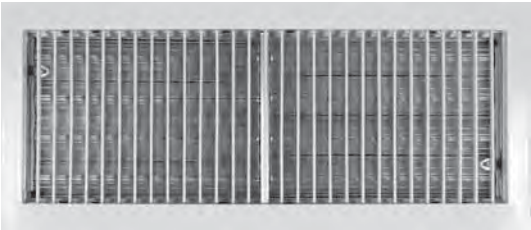

Blades Mounting : Vertical

- **RAR / EAR** : is Return, Extract or Exhaust Air Register, Single Deflection Blades c/w Opposed Blade Damper.
- Registers called Return, Extract or Exhaust Air Register and coded as **RAR / EAR** are always equipped with Opposed Blade Damper (provided as standard).

N : Nominal/Listed Size = Length (L) x Height (H)
A : Actual Size = (L-10) x (H-10)
F : Face Size = (L+50) x (H+50)

- Registers furnished approximately 10 mm less than the Nominal/Listed Size.
- All dimensions are in mm and subject to ±1 mm tolerance.

Single Deflection Grilles

Construction and Dimensional Details

Model RAG HB SD or EAG HB SD

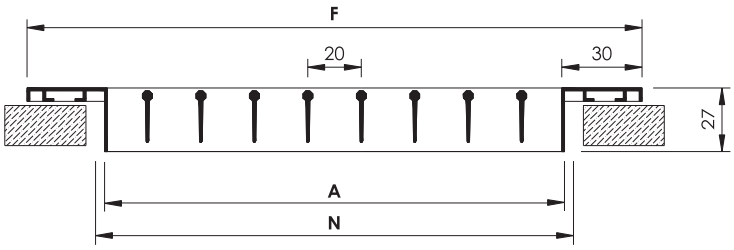

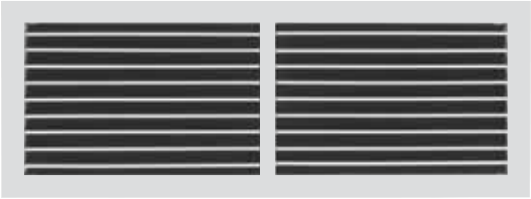

Blades Mounting : Horizontal

Model RAG VB SD or EAG VB SD

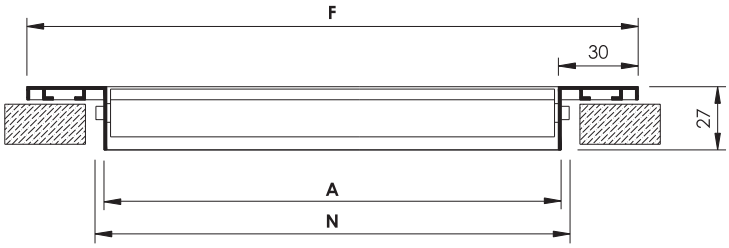

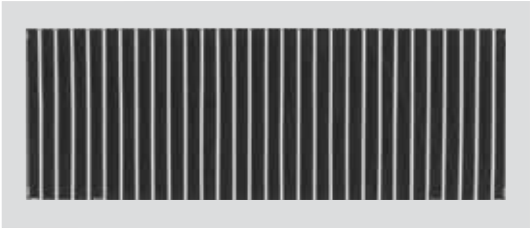

Blades Mounting : Vertical

Model RAG HB SD or EAG HB SD, Fixed Blades 45 °

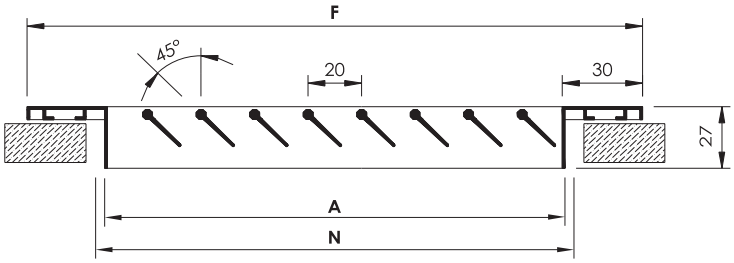

Blades Mounting : Horizontal, set in a fixed position at an angle of 45°

- **RAG / EAG** : is Return, Extract or Exhaust Air Grille, Single Deflection Blades w/o Opposed Blade Damper.
- Grilles called Return, Extract or Exhaust Air Grille and coded as **RAG / EAG** are usually supplied w/o Opposed Blade Damper.

N : Nominal/Listed Size = Length (L) x Height (H)
A : Actual Size = (L-10) x (H-10)
F : Face Size = (L+50) x (H+50)

- Grilles furnished approximately 10 mm less than the Nominal/Listed Size.
- All dimensions are in mm and subject to ±1 mm tolerance.

Fresh Air Grilles and Registers
Construction and Dimensional Details

Model FAG C/W FILTER

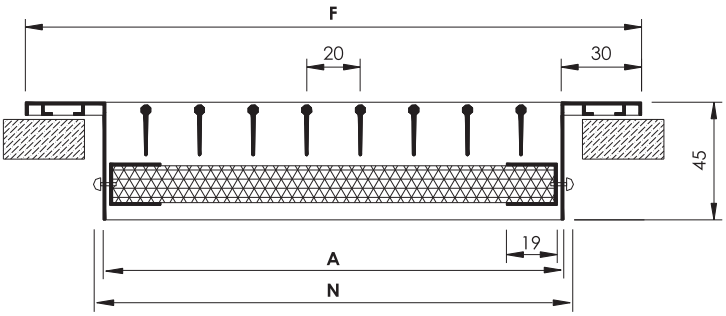

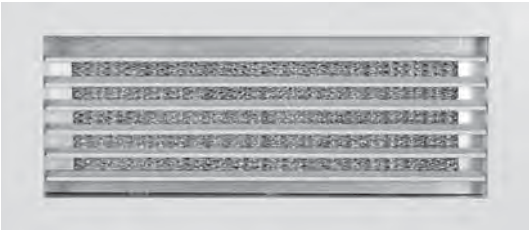

Blades Mounting : Horizontal (Adjustable or Fixed at 45 ° Angle).

Model FAG C/W FILTER (DOUBLE FRAME)

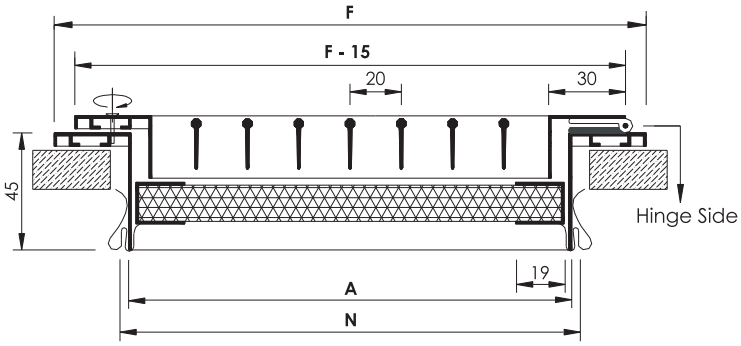

Blades Mounting : Horizontal (Adjustable or Fixed at 45 ° Angle).
Filter : easily removable after the grille fixed.

Model FAG + D C/W FILTER or FAR C/W FILTER (DOUBLE FRAME)

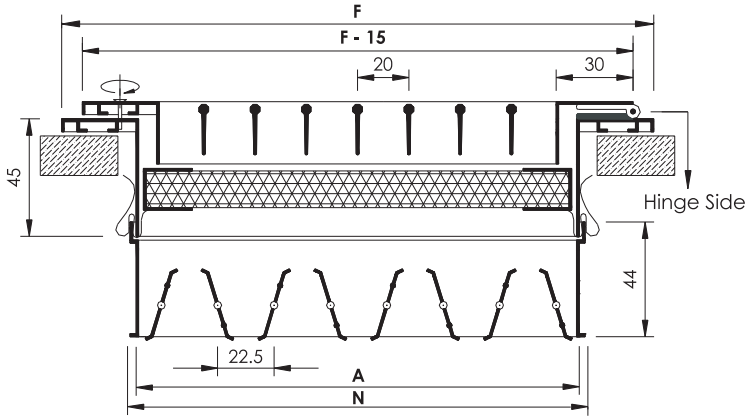

Blades Mounting : Horizontal (Adjustable or Fixed at 45 ° Angle).
Filter : easily removable after the grille fixed.
OBD : adjustable after removal of the filter.

- **FAG / FAR** : is Fresh Air Grille / Register, Single Deflection Blades c/w Aluminium Washable Filter Media 1/2 " thickness.
- Double Frame Grilles / Registers are provided with door hinge from one side and screw from other side allowing the second frame (inner one) to act as an access door to the Filter and/or Oppossed Blade Damper.

N : Nominal/Listed Size = Length (L) x Height (H)
A : Actual Size = (L-10) x (H-10)
F : Face Size = (L+50) x (H+50)

- Grilles / Registers furnished approximately 10 mm less than the Nominal/Listed Size.
- All dimensions are in mm and subject to ±1 mm tolerance.

Eggcrate Grilles and Registers
Construction and Dimensional Details

Model ECG

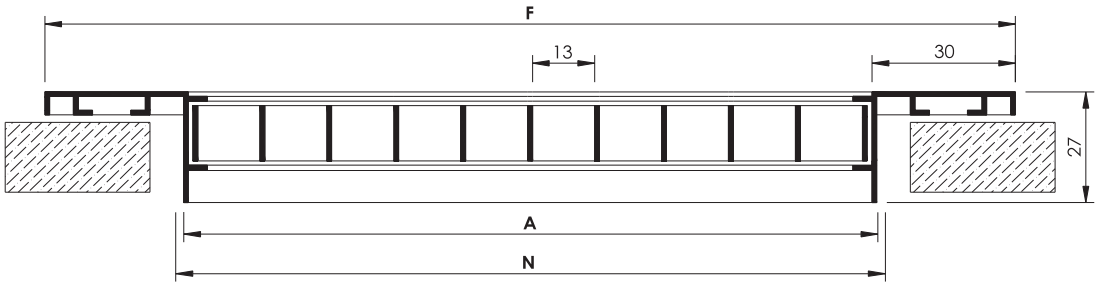

Model ECG + D or ECR

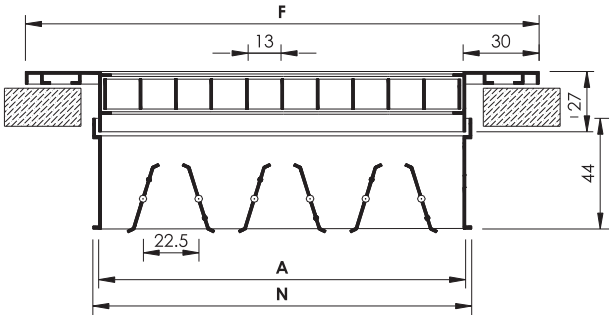

Model ECG + F

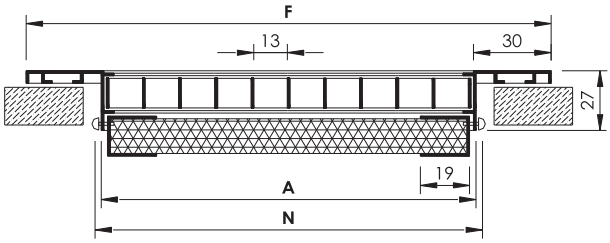

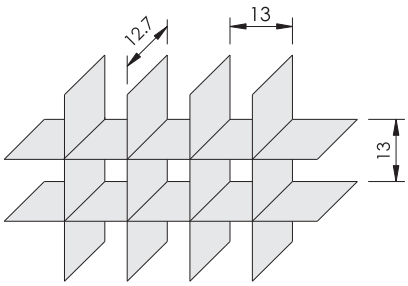

Eggcrate Core Design

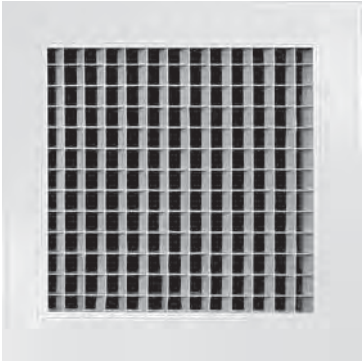

- The Eggcrate grilles with Aluminium Eggcrate mesh are normally used for the return and recirculation of air inside offices, living areas, commercial centres,..... etc.
- The Particular design of the Eggcrate central core of 13 x 13 mm opening permits the use of a large free surface area (90 % Free Area) without turbulance.
- The Eggcrate grille frame with the channel border is used to fix the central core.
- In respect to traditional grilles with inclined or fixed blades, it's possible to reduce the grilles dimensions while maintaining equal performances, or reduce noise level and pressure drop while maintaining equal dimensions and air flow.
- Eggcrate grilles can be mounted either horizontally or vertically (ceiling or side wall) without affecting their aesthetic form or performance.
- The Eggcrate grilles are available with standard accessories such as Opposed Blade Damper or Aluminium Washable Filter Media of 1/2 " thickness.

N : Nominal/Listed Size = Length (L) x Height (H)
A : Actual Size = (L-10) x (H-10)
F : Face Size = (L+50) x (H+50)

- Eggcrate Grilles / Registers furnished approximately 10 mm less than the Nominal/Listed Size.
- All dimensions are in mm and subject to ±1 mm tolerance.

Grilles and Registers Accessories

A. Opposed Blade Damper

- Frame and Blades are of high quality Extruded Aluminium Profiles construction.
- Blades are designed to rotate opposite to each other.
- The specially designed blades have an overlapping lip which assures a tight closure.
- Generally, the opposed blade damper is attached to the grille and fixed to it by means of " S " clips.
- Blades are separated from it's frame by nylon bushes. This method of assembly provides maximum rattle - free performance and eliminates corrosion.
- Usually Damper standard surface finish is Aluminium in Mill Finish. Matt black powder coating color is also available on request (as an option).
- Screw type operation.

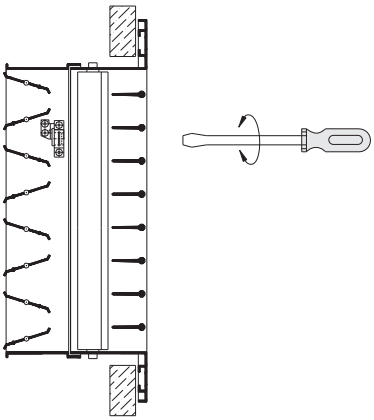

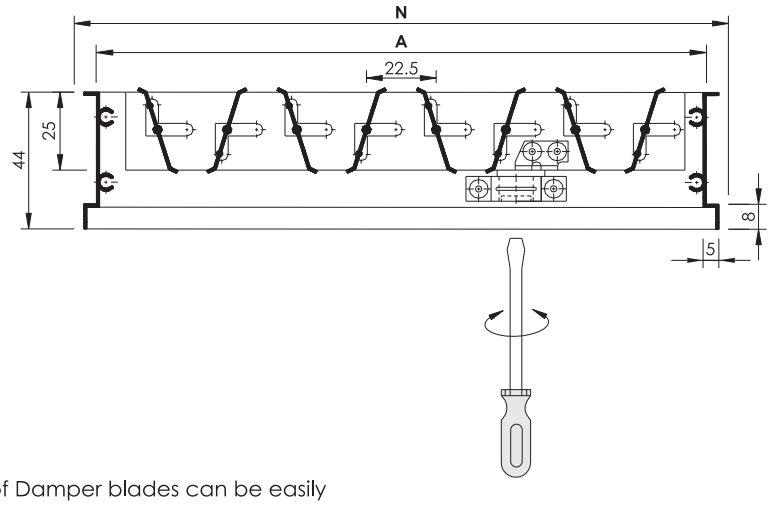

- The range from full open to full closed position of Damper blades can be easily adjusted by a screw driver accessable from the face of the register as shown in the figure.
- All dimensions are in mm and subject to ±1 mm tolerance.

B. Aluminium Washable Filter

- Construction : Consists of expanded metal Aluminium mesh with unique pattern.
- Application : For collection of big particles of dust. It's used for corrosive atmospheres.
- Features : High dust holding capacity, low resistance filters. It can be cleaned with regular water and live longer live.
- Filter Thickness : Standard 1/2 " thickness provided with Aluminium Profiled U - Channel Frame of 19 mm width.

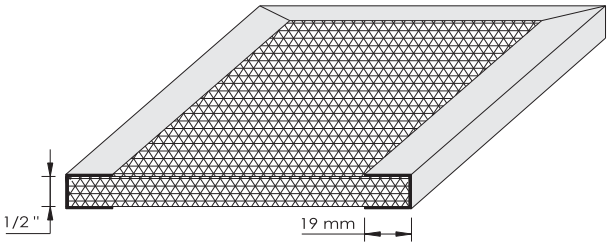

Grilles and Registers Accessories

C. Foam Type Rubber Gasket (Optional)

- Gasket type : Single Sided Self - Adhesive Foam.
- Gasket Function : Sealing.
- Gasket Benefits :
  - Stops Grille / Register rattling.
  - Minimize air infiltration.
  - Stops leaks and pressure losses.
  - Takes up unevenness of ceiling.
  - Easy to apply on site or in factory.
- To be applied around the perimeter of the back side of the Grille / Register to act as an air seal to prevent pressurised air from escaping from the sides of the outer frame when fixed to the wall.

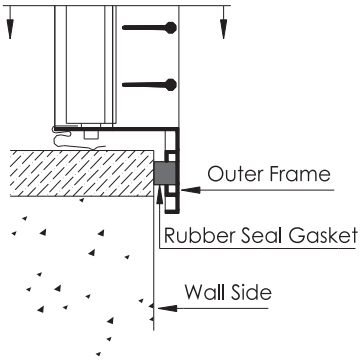

Mullion Arrangement

Without Mullion

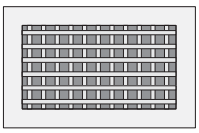

L ⩽ 500 mm

1 Mullion

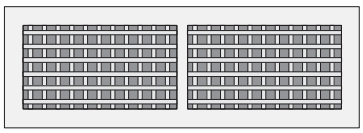

L > 500 mm
& L ⩽ 1000 mm

2 Mullions or more

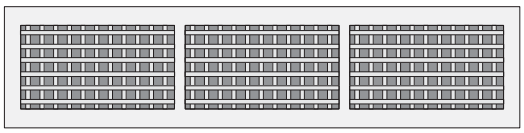

L > 1000 mm

- When the length of the Grille / Register is exceeding 500 mm but not more than 1000 mm, the horizontal blades are supported by a mullion. Fixed at the centre of the Grille / Register for more stability.
- When the length of the Grille / Register is exceeding 1000 mm, two or more mullions (depending on length) are required to support the horizontal blades at equal intervals.
- Mullion Construction : Aluminium Profiled U - Channel of 15 mm width.

Cross Sectional Drawings for Profiles used in Grilles / Registers

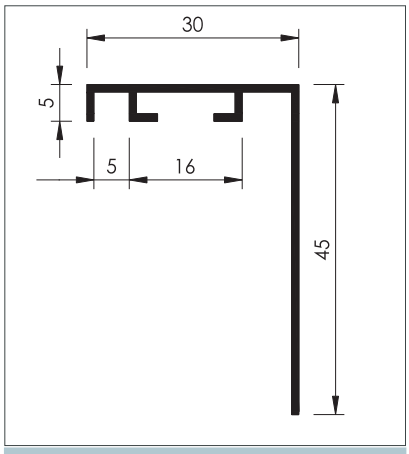

Frame Profile Section
Double Deflection Grilles and Registers

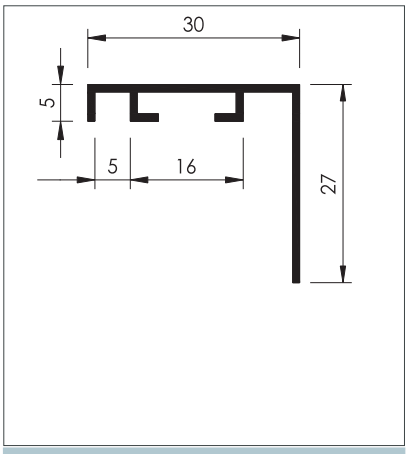

Frame Profile Section
Single Deflection Grilles and Registers

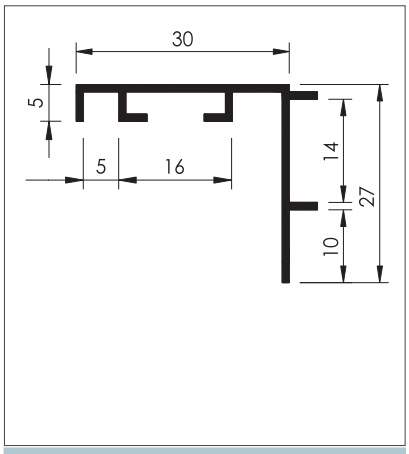

Frame Profile Section
Eggcrate Grilles and Registers

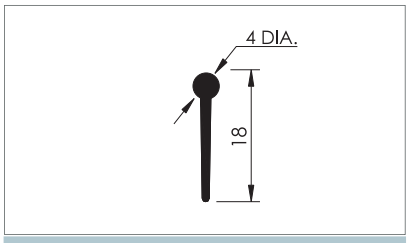

Aerofoil Blade Profile Section
Grilles and Registers

- All dimensions are in mm and subject to ± 0.2 mm tolerance.

Available Fixing Mounting

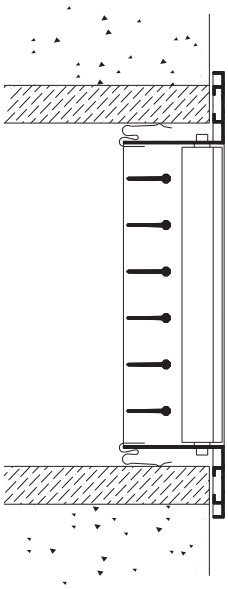

A. Concealed Fixing (Spring Clip Mounting)

The Grille / Register is fixed by means of spring clips to the wall or partition where no screws are visible.

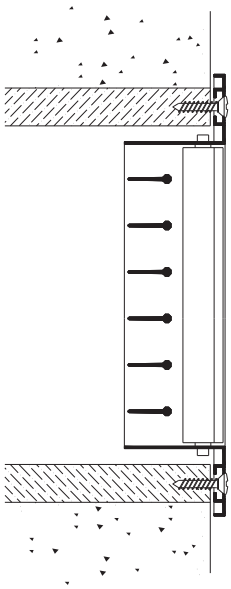

B. Face Screw Fixing

The Grille / Register is fixed to the wooden Frame by means of visible screws.

Engineering and Performance Data

TABLE GR - 04

EFFECTIVE AREA VALUES FOR DOUBLE BLADES DEFLECTION GRILLES AND REGISTERS IN (m^2)
MODEL SAR and SAG (HFB or VFB) DD

L \ H	100	150	200	250	300	350	400	450	500	550	600
100	0.005										
150	0.008	0.013									
200	0.011	0.017	0.022								
250	0.014	0.022	0.029	0.037							
300	0.016	0.026	0.034	0.043	0.052						
350	0.019	0.030	0.039	0.050	0.060	0.069					
400	0.022	0.035	0.046	0.058	0.069	0.080	0.093				
450	0.025	0.039	0.051	0.065	0.077	0.090	0.104	0.116			
500	0.028	0.043	0.057	0.073	0.087	0.101	0.116	0.130	0.146		
550	0.029	0.046	0.060	0.077	0.092	0.106	0.123	0.137	0.154	0.169	
600	0.032	0.051	0.067	0.085	0.101	0.117	0.135	0.151	0.170	0.186	0.204
650	0.035	0.055	0.072	0.092	0.109	0.127	0.146	0.164	0.184	0.201	0.221
700	0.038	0.059	0.078	0.100	0.119	0.137	0.159	0.178	0.199	0.218	0.240
750	0.040	0.063	0.084	0.107	0.127	0.147	0.170	0.190	0.213	0.233	0.256
800	0.043	0.068	0.090	0.115	0.136	0.158	0.183	0.204	0.229	0.251	0.275
850	0.046	0.072	0.095	0.121	0.144	0.167	0.194	0.217	0.243	0.266	0.292
900	0.049	0.077	0.101	0.129	0.154	0.178	0.206	0.231	0.259	0.283	0.311
950	0.052	0.081	0.107	0.136	0.162	0.188	0.217	0.243	0.272	0.298	0.328
1000	0.055	0.086	0.113	0.144	0.171	0.199	0.230	0.257	0.288	0.315	0.347
1050	0.056	0.088	0.116	0.148	0.176	0.204	0.236	0.264	0.296	0.324	0.356
1100	0.059	0.093	0.122	0.156	0.185	0.215	0.249	0.278	0.312	0.341	0.375
1150	0.062	0.097	0.128	0.163	0.194	0.224	0.260	0.290	0.326	0.356	0.392
1200	0.065	0.102	0.134	0.171	0.203	0.235	0.272	0.305	0.341	0.374	0.411
1250	0.067	0.106	0.139	0.178	0.211	0.245	0.283	0.317	0.355	0.389	0.427
1300	0.070	0.110	0.145	0.186	0.221	0.256	0.296	0.331	0.371	0.406	0.446
1350	0.073	0.114	0.151	0.192	0.229	0.265	0.307	0.343	0.385	0.421	0.463
1400	0.076	0.119	0.157	0.200	0.238	0.276	0.319	0.357	0.401	0.439	0.482
1450	0.078	0.123	0.162	0.207	0.246	0.286	0.330	0.370	0.414	0.454	0.498
1500	0.081	0.128	0.169	0.215	0.256	0.297	0.343	0.384	0.430	0.471	0.517

- L & H dimensions are in mm .
- Values above are based on 0 ° Blades Deflection.
- Damper at full open position.

Engineering and Performance Data

TABLE GR-05

EFFECTIVE AREA VALUES FOR SINGLE BLADES DEFLECTION GRILLES AND REGISTERS IN (m^2)
MODEL RAR, RAG (HB or VB) SD, FAG and FAR

L \ H	100	150	200	250	300	350	400	450	500	550	600
100	0.007										
150	0.010	0.016									
200	0.014	0.022	0.029								
250	0.018	0.028	0.037	0.047							
300	0.021	0.034	0.045	0.057	0.068						
350	0.025	0.039	0.052	0.067	0.080	0.092					
400	0.029	0.045	0.060	0.076	0.091	0.106	0.122				
450	0.033	0.051	0.068	0.086	0.103	0.120	0.138	0.155			
500	0.036	0.057	0.075	0.096	0.115	0.133	0.154	0.172	0.193		
550	0.039	0.061	0.081	0.103	0.123	0.143	0.165	0.185	0.207	0.227	
600	0.043	0.067	0.089	0.113	0.135	0.156	0.181	0.202	0.227	0.248	0.273
650	0.046	0.073	0.096	0.123	0.146	0.170	0.196	0.220	0.246	0.270	0.296
700	0.050	0.078	0.104	0.132	0.158	0.184	0.212	0.238	0.266	0.292	0.320
750	0.054	0.084	0.112	0.142	0.170	0.197	0.228	0.255	0.286	0.313	0.344
800	0.057	0.090	0.119	0.152	0.181	0.211	0.243	0.273	0.305	0.335	0.367
850	0.061	0.096	0.127	0.162	0.193	0.224	0.259	0.290	0.325	0.356	0.391
900	0.065	0.102	0.135	0.172	0.205	0.238	0.275	0.308	0.345	0.378	0.415
950	0.068	0.107	0.142	0.181	0.216	0.252	0.290	0.326	0.364	0.400	0.438
1000	0.072	0.113	0.150	0.191	0.228	0.265	0.306	0.343	0.384	0.421	0.462
1050	0.075	0.117	0.156	0.198	0.236	0.275	0.317	0.356	0.398	0.436	0.479
1100	0.078	0.123	0.163	0.208	0.248	0.288	0.337	0.373	0.418	0.458	0.502
1150	0.082	0.129	0.171	0.218	0.260	0.302	0.349	0.391	0.437	0.480	0.526
1200	0.086	0.135	0.179	0.227	0.271	0.316	0.364	0.408	0.457	0.501	0.550
1250	0.090	0.140	0.186	0.237	0.283	0.329	0.380	0.426	0.477	0.523	0.574
1300	0.093	0.146	0.194	0.247	0.295	0.343	0.396	0.444	0.496	0.544	0.597
1350	0.097	0.152	0.202	0.257	0.307	0.356	0.411	0.461	0.516	0.566	0.621
1400	0.101	0.158	0.209	0.267	0.318	0.370	0.427	0.479	0.536	0.588	0.645
1450	0.104	0.164	0.217	0.276	0.330	0.384	0.443	0.496	0.556	0.609	0.668
1500	0.108	0.169	0.225	0.286	0.342	0.397	0.458	0.514	0.575	0.631	0.692

- L & H dimensions are in mm .
- Values above are based on 0 ° Blades Deflection.
- Damper at full open position.

Engineering and Performance Data

TABLE GR- 06

EFFECTIVE AREA VALUES FOR EGGCRATE GRILLES AND REGISTERS IN (m^2)
MODEL ECG, ECR and ECG + F

L \ H	100	150	200	250	300	350	400	450	500	550	600
100	0.007										
150	0.011	0.018									
200	0.015	0.024	0.032								
250	0.019	0.030	0.041	0.052							
300	0.023	0.037	0.050	0.063	0.076						
350	0.028	0.043	0.058	0.073	0.089	0.104					
400	0.032	0.049	0.067	0.084	0.102	0.119	0.137				
450	0.036	0.055	0.075	0.095	0.115	0.135	0.154	0.174			
500	0.040	0.062	0.084	0.106	0.128	0.150	0.172	0.194	0.216		
550	0.044	0.068	0.092	0.117	0.141	0.165	0.196	0.214	0.238	0.262	
600	0.048	0.074	0.101	0.127	0.154	0.181	0.207	0.234	0.260	0.287	0.313
650	0.052	0.081	0.109	0.138	0.167	0.196	0.225	0.253	0.282	0.311	0.340
700	0.056	0.087	0.118	0.149	0.180	0.211	0.242	0.273	0.304	0.335	0.366
750	0.060	0.093	0.127	0.160	0.193	0.226	0.260	0.293	0.326	0.360	0.393
800	0.064	0.100	0.135	0.171	0.206	0.242	0.277	0.313	0.348	0.384	0.419
850	0.068	0.106	0.144	0.181	0.219	0.257	0.295	0.333	0.370	0.408	0.446
900	0.072	0.112	0.152	0.192	0.232	0.272	0.312	0.352	0.392	0.433	0.473
950	0.076	0.118	0.161	0.203	0.245	0.288	0.330	0.372	0.415	0.457	0.499
1000	0.080	0.125	0.169	0.214	0.258	0.303	0.347	0.392	0.437	0.418	0.526
1050	0.084	0.131	0.178	0.225	0.271	0.318	0.365	0.412	0.459	0.505	0.552
1100	0.088	0.137	0.186	0.235	0.284	0.334	0.383	0.432	0.481	0.530	0.579
1150	0.092	0.144	0.195	0.246	0.298	0.349	0.400	0.451	0.503	0.554	0.605
1200	0.096	0.150	0.203	0.257	0.311	0.364	0.418	0.471	0.525	0.578	0.632
1250	0.100	0.156	0.212	0.268	0.324	0.379	0.435	0.491	0.547	0.603	0.658
1300	0.104	0.163	0.221	0.279	0.337	0.395	0.453	0.511	0.569	0.627	0.685
1350	0.109	0.169	0.229	0.289	0.350	0.410	0.470	0.531	0.591	0.651	0.712
1400	0.113	0.175	0.238	0.300	0.363	0.425	0.488	0.550	0.613	0.676	0.738
1450	0.117	0.181	0.246	0.311	0.376	0.441	0.505	0.570	0.635	0.700	0.765
1500	0.121	0.188	0.255	0.322	0.389	0.456	0.523	0.590	0.657	0.724	0.791

- L & H dimensions are in mm .
- Damper at full open position.

Engineering and Performance Data
General Selection Diagram

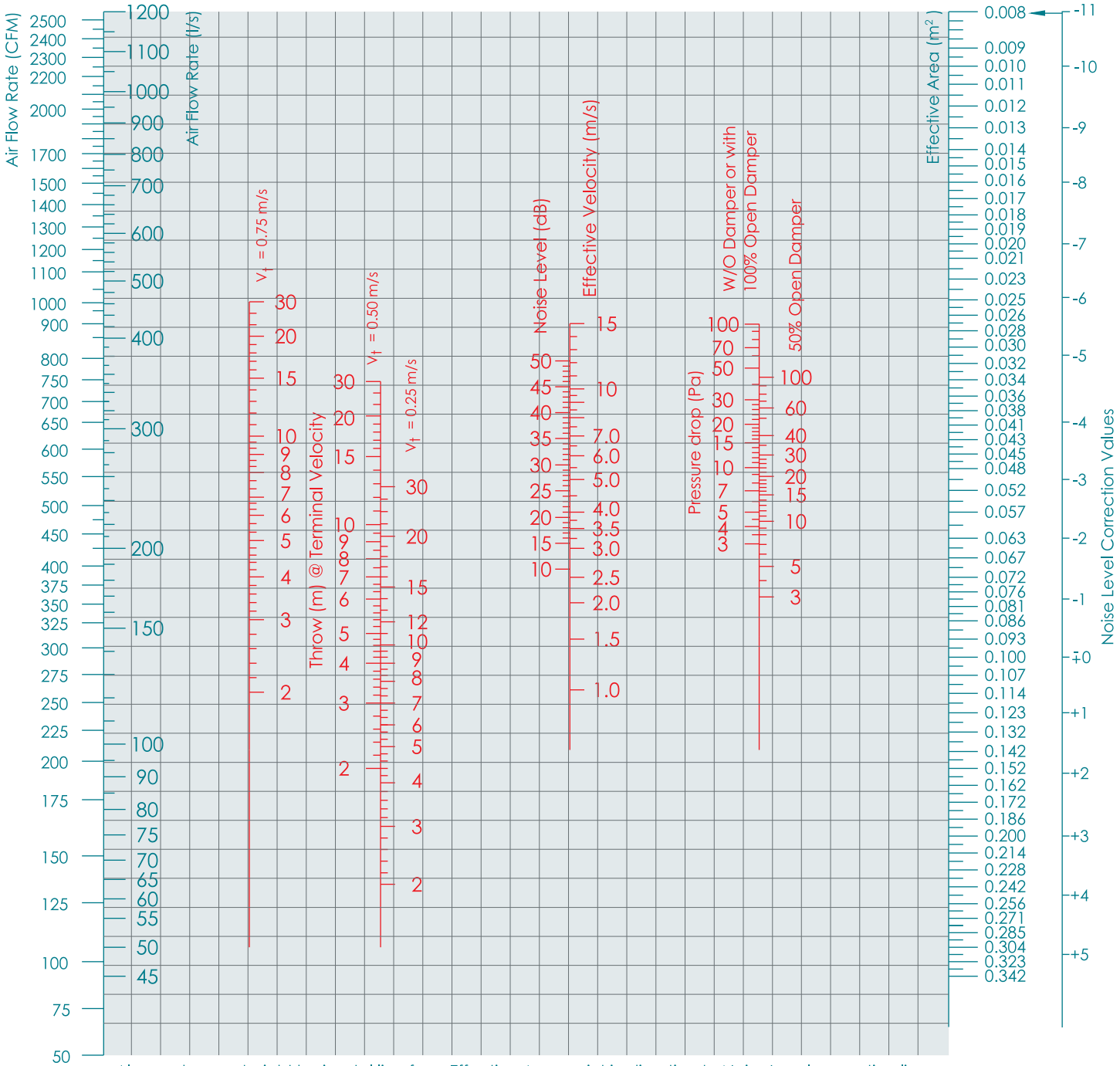

- Always draw a straight horizontal line from Effective Area point in direction to Noise Level correction line on right side to obtain it's correction value.

Correction Multipliers / Values :

Blades Deflection	22 1/2 °	45 °
Velocity	x 1.20	x 1.40
Pressure Drop	x 1.30	x 1.60
Throw	x 0.80	x 0.60
Noise Level	+ 2.0	+ 3.0

How to use this Diagram?

Case I : Size and Air Flow Rate are given.

Illustrative Example :

Given Data : Required Model : SAR HFB DD
Nominal Size : 1000 x 150 mm
Air Flow Rate : 550 CFM

Assume Blades setting at 0° Deflection and the Damper at full open position.

See Page No. GR-13 Table No. GR-04, Effective Area = 0.086 m ^{2},

Apply the CFM and Effective Area values to the diagram and draw a straight line connecting both of them, easily from the intersection you can read all the related data as below :-

$V_{eff.}$ =2.8 m/s (intersection point of drawn line with $V_{eff.}$ vertical line).

Noise Level <15 dB (the value where the drawn line intersecting the Noise Level Vertical line after checking Noise Level correction values).

Pressure Drop =2.5 Pa (from the same $V_{eff.}$ point draw a horizontal line intersecting the opposite Pressure Drop vertical line and read this value).

Throw @ V_t=0.25 m/s = 23.0 m (Intersection point of drawn line with Throw vertical line @ V_t = 0.25 m/s).

@ V_t=0.50 m/s = 10.0 m (Intersection point of drawn line with Throw vertical line @ V_t= 0.50 m/s).

@ V_t=0.75 m/s = 5.7 m (where the drawn line intersecting the Throw vertical line @ V_t=0.25 and 0.50 m/s draw a horizontal straight line toward the opposite Throw vertical line @ V_t = 0.75 m/s and read this value).

Case I : Size and Air Flow Rate are given

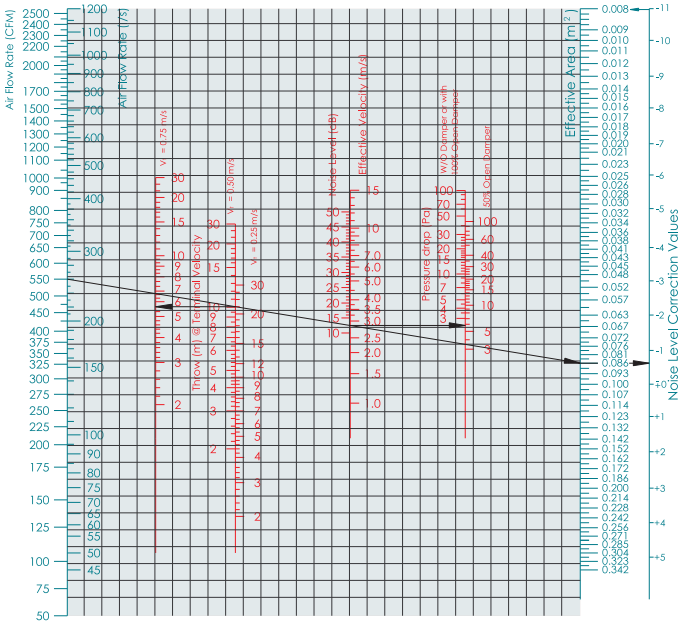

Case II : Air Flow Rate and Noise Level are given.

Illustrative Example :

Given Data : Required Model : RAG HB SD
Air Flow Rate : 200 CFM
Noise Level : not to exceed 25 dB.

Assume $V_{eff.}$ = 3.5 m/s to find that Noise Level = (18 - 5) = 13 (not exceeding 25 dB), then other related data can be read as below :-

Effective Area = 0.029 m ^{2}
Grille Nominal Size = 200 x 200 mm
Pressure Drop = 3.9 Pa
Throw Values : not required for Return Air Grilles.

Above data are based on 0 ° Blades Deflection, in case that the same Grille is required but @ 45 ° Blades Deflection, data to be corrected as below :-

$V_{eff.}$ = 3.5 x 1.4 = 4.9 m/s
Noise Level = 13 + 3 = 16 dB
Pressure Drop = 3.9 x 1.6 =6.24 Pa

Case II : Air Flow Rate and Noise Level are given

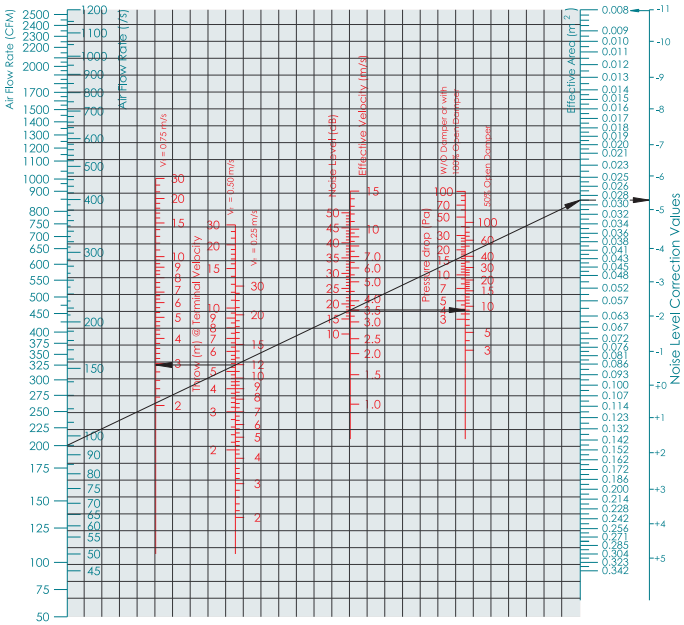

Tabular Selection for Double Deflection Grilles / Registers
Model SAR & SAG (HFB or VFB) DD

TABLE GR-07

SIZE (L) x (H) mm	SIZE (L) x (H) Inch	$A_{eff.}$ m^2	Flow Rate L/S (CFM)	24 (50)	35 (75)	47 (100)	59 (125)	71 (150)	83 (175)	94 (200)	106 (225)	118 (250)	130 (275)
			Veff. FPM (m/s)	664 (3.3)	995 (5.0)	1327 (6.6)	1659 (8.3)						
100 x 100	4" x 4"	0.005	△ Pt (pa)	8.4	11.5	16.0	24.0						
150 x 100	6" x 4"	0.008	Th. (m)	1.7-2.8-6.5	2.1-3.5-8.0	2.6-4.4-11	3.2-5.7-13						
			Noise Level	16	20	24	29						
			Veff. FPM (m/s)	422 (2.1)	633 (3.2)	844 (4.2)	1056 (5.3)	1267 (6.3)	1478 (7.4)	1689 (8.4)	1900 (9.5)	2111 (10.6)	
200 x 100	8" x 4"	0.011	△ Pt (pa)	4.5	5.6	8.7	13.0	18.0	28.0	40.0	48.0	55.0	
			Th. (m)	1.4-2.5-5.5	1.9-3.0-7.0	2.2-3.7-8.4	2.8-5.0-11	3.3-6-12.4	4.2-7.5-17	5.3-9.3-20	5.9-10.5-24	7.0-12-28	
			Noise Level	<15	<15	17	24	27	32	36	37	40	
			Veff. FPM (m/s)	344 (1.7)	516 (2.6)	688 (3.4)	860 (4.3)	1032 (5.2)	1204 (6.0)	1376 (6.9)	1548 (7.7)	1720 (8.6)	1892 (9.5)
150 x 150	6" x 6"	0.013	△ Pt (pa)	2.5	4.0	5.4	8.2	11.5	17.0	22.0	28.0	35.0	43.0
250 x 100	10" x 4"	0.014	Th. (m)	1.1-2.2-4.8	1.5-2.7-6.0	2.0-3.3-7.5	2.6-4.4-9.7	3.0-5.3-12	3.8-6.7-15	4.6-8.2-18	5.2-9.4-20	5.9-10.5-24	7.0-12-27
			Noise Level	<15	<15	<15	19	23	28	31	33	35	37
			Veff. FPM (m/s)	265 (1.3)	398 (2.0)	531 (2.7)	664 (3.3)	796 (4.0)	929 (4.6)	1062 (5.3)	1194 (6.0)	1327 (6.6)	1460 (7.3)
300 x 100	12" x 4"	0.016	△ Pt (pa)	0.7	1.5	2.0	3.7	5.0	7.3	10.0	13.0	15.0	19.0
200 x 150	8" x 6"	0.017	Th. (m)	0.8-1.8-4.0	1.1-2.3-5.0	1.6-2.7-6.2	2.2-3.5-8.0	2.6-4.4-9.7	3.2-5.6-13	3.8-6.5-15	4.2-7.5-17	4.8-8.7-19	5.4-9.8-22
350 x 100	14" x 4"	0.019	Noise Level	<15	<15	<15	<15	<15	19	23	25	27	30
			Veff. FPM (m/s)	211 (1.1)	317 (1.6)	422 (2.1)	528 (2.6)	633 (3.2)	739 (3.7)	844 (4.2)	950 (4.8)	1056 (5.3)	1161 (5.8)
400 x 100	16" x 4"	0.022	△ Pt (pa)	0.3	0.5	1.0	2.5	3.7	4.5	7.0	9.0	11.0	13.5
250 x 150	10" x 6"	0.022	Th. (m)	0.5-1.4-3.7	1.0-2.0-4.4	1.4-2.5-5.7	2.0-3.2-7.3	2.4-4.0-9.0	2.8-5.0-11	3.5-6.0-14	4.0-7.0-16	4.4-8-17.5	5.0-9-19.5
200 x 200	8" x 8"	0.022	Noise Level	<15	<15	<15	<15	<15	<15	18	21	23	26
			Veff. FPM (m/s)			364 (1.8)	455 (2.3)	546 (2.7)	638 (3.2)	729 (3.6)	820 (4.1)	911 (4.6)	1002 (5.0)
450 x 100	18" x 4"	0.025	△ Pt (pa)			0.5	1.0	2.0	3.5	4.8	6.0	7.0	9.0
300 x 150	12" x 6"	0.026	Th. (m)			1.2-2.3-5.0	1.8-2.9-6.7	2.2-3.6-8.0	2.7-4.8-10.5	3.1-5.5-12.2	3.6-6.2-14.5	4.0-7.0-16	4.6-9.0-18
			Noise Level			<15	<15	<15	<15	<15	17	19	22
500 x 100	20" x 4"	0.028	Veff. FPM (m/s)			320 (1.6)	400 (2.0)	480 (2.4)	561 (2.8)	641 (3.2)	721 (3.6)	801 (4.0)	881 (4.4)
550 x 100	22" x 4"	0.029	△ Pt (pa)			0.4	0.6	1.0	2.5	3.6	4.5	5.5	7.0
250 x 200	10" x 8"	0.029	Th. (m)			1.1-2.1-4.6	1.6-2.7-6.2	2.1-3.4-7.7	2.6-4.4-9.7?<15	2.9-5.2-11.5	3.3-5.8-13.5	3.8-6.7-15	4.2-7.5-17
350 x 150	14" x 6"	0.030	Noise Level			<15	<15	<15	485 (2.4)	<15	<15	17	20
600 x 100	24" x 4"	0.032	Veff. FPM (m/s)			277 (1.4)	347 (1.7)	416 (2.1)	0.9	555 (2.8)	624 (3.1)	693 (3.5)	763 (3.8)
300 x 200	12" x 8"	0.034	△ Pt (pa)			0.2	0.4	0.6	2.3-3.8-8.7	1.7	3.0	4.0	4.7
650 x 100	26" x 4"	0.035	Th. (m)			0.8-1.8-4.2	1.4-2.5-5.5	1.8-3.0-7.0	<15	2.6-4.6-10	3.0-5.4-12	3.5-6.0-14	3.9-6.8-15
400 x 150	16" x 6"	0.035	Noise Level			<15	<15	<15		<15	<15	<15	16

Notes :
- Blades setting at 0 ° Deflection.
- Demper at full open position.
- Throw distance measured at Vt=0.75, 0.50 and 0.25 m/s respectively.
- Noise Level values are based on 10 dB room attenuation.

Tabular Selection for Double Deflection Grilles / Registers
Model SAR & SAG (HFB or VFB) DD

TABLE GR-08

SIZE (L) x (H) mm	SIZE (L) x (H) Inch	$A_{eff.}$ m^2	Flow Rate L/S (CFM)	142 (300)	153 (325)	165 (350)	177 (375)	189 (400)	212 (450)	236 (500)
			Veff. FPM (m/s)	2064 (10.3)						
150 x 150	6" x 6"	0.013	△ Pt (pa)	50.0						
250 x 100	10" x 4"	0.014	Th. (m)	7.6-13.2- /						
			Noise Level	40						
			Veff. FPM (m/s)	1592 (8.0)	1725 (8.6)	1858 (9.3)	1991 (10.0)	2123 (10.6)	2389 (11.9)	
300 x 100	12" x 4"	0.016	△ Pt (pa)	21.5	23.5	32.0	38.0	50.0	70.0	
200 x 150	8" x 6"	0.017	Th. (m)	6.3-11-25	7.2-12.2-29	7.5-13- /	8.4-14- /	9.3-16- /	11-19- /	
350 x 100	14" x 4"	0.019	Noise Level	32	34	36	38	40	44	
			Veff. FPM (m/s)	1267 (6.3)	1372 (6.9)	1478 (7.4)	1583 (7.9)	1689 (8.4)	1900 (9.5)	2111 (10.6)
400 x 100	16" x 4"	0.022	△ Pt (pa)	16.0	19.0	22.0	25.0	30.0	40.0	46.0
250 x 150	10" x 6"	0.022	Th. (m)	5.7-10-22	6.5-11.5-23	7.1-12-28	7.5-13- /	8.0-14- /	9.4-16- /	11-19- /
200 x 200	8" x 8"	0.022	Noise Level	28	31	33	34	36	38	40
			Veff. FPM (m/s)	1093 (5.5)	1184 (5.9)	1275 (6.4)	1366 (6.8)	1457 (7.3)	1639 (8.2)	1821 (9.1)
450 x 100	18" x 4"	0.025	△ Pt (pa)	10.5	13.0	15.0	17.0	20.0	24.0	33.0
300 x 150	12" x 6"	0.026	Th. (m)	5-9.2-19.8	5.7-10-22.5	6.3-11-24	7.0-12-28	7.7-13.2- /	8.7-15- /	9.7-17- /
			Noise Level	24	27	29	31	33	35	38
500 x 100	20" x 4"	0.028	Veff. FPM (m/s)	978 (4.9)	1059 (5.3)	1141 (5.7)	1222 (6.1)	1304 (6.5)	1467 (7.3)	1630 (8.1)
550 x 100	22" x 4"	0.029	△ Pt (pa)	8.0	9.5	11.0	13.0	16.0	20.0	24.0
250 x 200	10" x 8"	0.029	Th. (m)	4.7-8.5-18.8	5.3-9.5-20	5.8-10.2-23	6.5-11.2-25	7.2-12.5-29	8-14- /	9.3-16- /
350 x 150	14" x 6"	0.030	Noise Level	22	24	25	27	30	32	35
600 x 100	24" x 4"	0.032	Veff. FPM (m/s)	832 (4.2)	901 (4.5)	971 (4.9)	1040 (5.2)	1109 (5.5)	1248 (6.2)	1386 (6.9)
300 x 200	12" x 8"	0.034	△ Pt (pa)	5.9	6.9	7.3	9.0	10.5	13.4	16.0
650 x 100	26" x 4"	0.035	Th. (m)	4.4-7.9-15.5	4.8-8.7-19	5.3-9.5-21	5.9-10.5-23	6.5-11.5-27	7.5-13-30	8.3-14.2- /
400 x 150	16" x 6"	0.035	Noise Level	19	21	22	24	26	28	30

- Tabulated data are subject to the same notes as in page No.GR - 18.

Tabular Selection for Double Deflection Grilles / Registers
Model SAR & SAG (HFB or VFB) DD

TABLE GR-09

SIZE (L) x (H) mm	SIZE (L) x (H) Inch	$A_{eff.}$ m^2	Flow Rate L/S (CFM)	118 (250)	130 (275)	142 (300)	153 (325)	165 (350)	170 (375)	189 (400)	200 (425)	212 (450)	224 (475)
250 x 250	10" x 10"	0.037	Veff. FPM (m/s)	603 (3.0)	664 (3.3)	724 (3.6)	784 (3.9)	844 (4.2)	905 (4.5)	965 (4.8)	1025 (5.1)	1086 (5.4)	1146 (5.7)
700 x 100	28" x 4"	0.038	△ Pt (pa)	2.7	3.6	4.3	5.1	6.0	5.9	8.0	8.8	10.0	11.8
450 x 150	18" x 6"	0.039	Th. (m)	3.3-5.7-13	3.7-6.4-14.8	4.1-7.2-16.5	4.6-8.1-18	5.0-9-19.5	5.4-9.6-21	6.0-11-23	6.5-11.3-26	7.0-12-28	7.6-13- /
750 x 100	30" x 4"	0.040	Noise Level	<15	<15	15	18	19	20	22	23	25	27
800 x 100	32" x 4"	0.043	Veff. FPM (m/s)	540 (2.7)	594 (3.0)	648 (3.2)	702 (3.5)	756 (3.8)	810 (4.1)	864 (4.3)	918 (4.6)	972 (4.9)	1026 (5.1)
500 x 150	20" x 6"	0.043	△ Pt (pa)	2.0	3.0	3.5	4.3	5.0	5.7	6.5	7.4	8.0	9.0
300 x 250	12" x 10"	0.043	Th. (m)	3.1-5.5-12.5	3.5-6.0-14	3.9-6.8-15.5	4.4-7.8-17.5	4.8-8.5-18.5	5.2-9.3-20	5.6-10-22	6.3-11-25	6.6-12-26.5	7.2-12.2-29
			Noise Level	<15	<15	<15	16	18	19	21	22	24	25
850 x 100	32" x 4"	0.046	Veff. FPM (m/s)	505 (2.5)	555 (2.8)	606 (3.0)	656 (3.3)	707 (3.5)	757 (3.8)	808 (4.0)	858 (4.3)	909 (4.5)	959 (4.8)
550 x 150	22" x 6"	0.046	△ Pt (pa)	1.5	2.4	3.0	3.7	4.3	4.9	6.0	6.3	7.0	8.0
400 x 200	16" x 8"	0.046	Th. (m)	3.0-5.3-12	3.4-5.8-13.5	3.8-6.6-15	4.3-7.5-17	4.5-8.0-18	5-9.0-19.5	5.4-9.6-21	5.9-10.5-23	6.3-11-25	7.0-12-27
			Noise Level	<15	<15	<15	<15	16	18	19	21	22	23
900 x 100	36" x 4"	0.049	Veff. FPM (m/s)	460 (2.3)	506 (2.5)	552 (2.8)	598 (3.0)	644 (3.2)	690 (3.4)	736 (3.7)	782 (3.9)	828 (4.1)	874 (4.4)
350 x 250	14" x 10"	0.050	△ Pt (pa)	0.9	1.0	1.8	2.5	3.5	3.6	4.2	4.7	5.2	6.0
450 x 200	18" x 8"	0.051	Th. (m)	2.8-11-5.0	3.1-8.0-12.8	3.5-6.1-14.2	4.0-7.0-16	4.3-7.5-17	4.6-8.3-18	5-9.0-19.5	5.5-9.6-21	6.0-10-23	6.3-11-25
300 x 300	12" x 12"	0.052	Noise Level	<15	<15	<15	<15	<15	<15	16	17	18	20

TABLE GR-10

SIZE (L) x (H) mm	SIZE (L) x (H) Inch	$A_{eff.}$ m^2	Flow Rate L/S (CFM)	142 (300)	153 (325)	165 (350)	170 (375)	189 (400)	200 (425)	212 (450)	224 (475)	236 (500)	260 (550)
650 x 150	26" x 6"	0.055	Veff. FPM (m/s)	489 (2.4)	530 (2.6)	570 (2.9)	611 (3.1)	652 (3.3)	693 (3.5)	733 (3.7)	774 (3.9)	815 (4.1)	896 (4.5)
500 x 200	20" x 8"	0.057	△ Pt (pa)	1.2	1.9	2.5	3.0	3.5	4.0	4.5	4.8	5.1	6.5
400 x 250	16" x 10"	0.058	Th. (m)	3.4-5.8-13.5	3.8-6.6-15	4.0-7.0-16	4.5-8.0-17.7	4.8-8.5-19	5.2-9.5-20	5.5-9.8-22	5.8-10.1-25	6.5-11.3-26	7.5-13-30
700 x 150	28" x 6"	0.059	Noise Level	<15	<15	<15	<15	<15	16	18	19	20	22
350 x 300	14" x 12"	0.060	Veff. FPM (m/s)	446 (2.2)	483 (2.4)	520 (2.6)	557 (2.8)	595 (3.0)	632 (3.2)	669 (3.3)	706 (3.5)	743 (3.7)	817 (4.1)
1150 x 100	46" x 4"	0.062	△ Pt (pa)	0.8	1.0	1.5	2.0	2.5	3.0	3.4	3.9	4.0	5.0
750 x 150	30" x 6"	0.063	Th. (m)	3.2-5.6-13	3.6-6.2-14.2	3.9-6.7-15.5	4.2-7.5-17	4.6-8.0-18	4.9-8.9-19	5.2-9.3-20	5.6-10-22	6.3-10.5-24	7.0-12-28
450 x 250	18" x 10"	0.065	Noise Level	<15	<15	<15	<15	<15	<15	<15	16	17	19
600 x 200	24" x 8"	0.067	Veff. FPM (m/s)	410 (2.0)	444 (2.2)	478 (2.4)	512 (2.6)	546 (2.7)	581 (2.9)	615 (3.1)	649 (3.2)	683 (3.4)	751 (3.8)
800 x 150	32" x 6"	0.068	△ Pt (pa)	0.6	0.9	1.0	1.6	2.0	2.7	3.0	3.4	3.8	4.6
400 x 300	16" x 12"	0.069	Th. (m)	3.1-5.5-12.8	3.5-6.0-14	3.8-6.6-15	4.1-7.2-16.5	4.5-8.0-18	4.8-8.6-19	5.1-9-19.7	5.5-9.6-21	6.3-11-23	6.9-11.8-27
350 x 350	14" x 14"	0.069	Noise Level	<15	<15	<15	<15	<15	<15	<15	15	16	18

- Tabulated data are subject to the same notes as in page No.GR - 18.

Tabular Selection for Double Deflection Grilles / Registers
Model SAR & SAG (HFB or VFB) DD

TABLE GR-11

SIZE (L) x (H) mm	SIZE (L) x (H) Inch	A eff. m 2	Flow Rate L/S (CFM)	236 (500)	260 (550)	283 (600)	307 (650)	330 (700)	354 (750)	378 (800)
250 x 250	10" x 10"	0.037	Veff. FPM (m/s)	1206 (6.0)	1327 (6.6)	1448 (7.2)	1568 (7.8)	1689 (8.4)	1810 (9.0)	
700 x 100	28" x 4"	0.038	△ Pt (pa)	13.0	16.0	18.5	24.0	26.0	30.0	
450 x 150	18" x 6"	0.039	Th. (m)	8.0-13.8- /	9.0-15- /	10-17- /	11.5-20- /	13-23- /	13.8-27- /	
750 x 100	30" x 4"	0.040	Noise Level	28	31	33	35	37	39	
800 x 100	32" x 4"	0.043	Veff. FPM (m/s)	1080 (5.4)	1188 (5.9)	1296 (6.5)	1404 (7.0)	1512 (7.6)	1620 (8.1)	
500 x 150	20" x 6"	0.043	△ Pt (pa)	10.0	12.0	15.0	18.0	21.0	24.0	
300 x 250	12" x 10"	0.043	Th. (m)	7.6-13- /	8.3-14.5- /	9.3-16- /	11-18.5- /	12.0-20- /	13-25- /	
			Noise Level	26	29	31	33	35	37	
850 x 100	32" x 4"	0.046	Veff. FPM (m/s)	1010 (5.0)	1111 (5.6)	1212 (6.1)	1313 (6.6)	1414 (7.1)	1515 (7.6)	1616 (8.1)
550 x 150	22" x 6"	0.046	△ Pt (pa)	8.5	11.0	13.0	15.0	17.0	20.0	24.0
400 x 200	16" x 8"	0.046	Th. (m)	7.3-12.5-29	8.3-14- /	9.3-16- /	10.5-18- /	11.3-19.5- /	12.5-23- /	14-27- /
			Noise Level	24	27	29	32	33	35	37
900 x 100	36" x 4"	0.049	Veff. FPM (m/s)	920 (4.6)	1012 (5.1)	1104 (5.5)	1196 (6.0)	1288 (6.4)	1380 (6.9)	1472 (7.4)
350 x 250	14" x 10"	0.050	△ Pt (pa)	6.5	7.3	9.5	11.5	14.5	16.0	19.0
450 x 200	18" x 8"	0.051	Th. (m)	6.7-12-27	7.6-13- /	8.5-15- /	9.5-16.5- /	10.8-18.5- /	12-20- /	13-25- /
300 x 300	12" x 12"	0.052	Noise Level	21	23	26	28	31	32	34

TABLE GR-12

SIZE (L) x (H) mm	SIZE (L) x (H) Inch	A eff. m 2	Flow Rate L/S (CFM)	283 (600)	307 (650)	330 (700)	354 (750)	378 (800)	401 (850)	425 (900)
650 x 150	26" x 6"	0.055	Veff. FPM (m/s)	978 (4.9)	1059 (5.3)	1141 (5.7)	1222 (6.1)	1304 (6.5)	1385 (6.9)	1467 (7.3)
500 x 200	20" x 8"	0.057	△ Pt (pa)	7.8	9.3	11.0	13.0	14.0	17.0	18.0
400 x 250	16" x 10"	0.058	Th. (m)	8.0-14- /	9.0-15.5- /	10-17.3- /	11.0-19- /	12.5-23- /	13.5-26- /	14.5-29- /
700 x 150	28" x 6"	0.059	Noise Level	25	27	29	30	32	33	35
350 x 300	14" x 12"	0.060	Veff. FPM (m/s)	892 (4.5)	966 (4.8)	1040 (5.2)	1115 (5.6)	1189 (5.9)	1263 (6.3)	1338 (6.7)
1150 x 100	46" x 4"	0.062	△ Pt (pa)	6.5	7.3	9.0	10.0	12.0	14.0	15.0
750 x 150	30" x 6"	0.063	Th. (m)	7.7-13.5- /	8.6-14.8- /	9.3-16- /	10.2-18- /	11.8-20- /	13-23- /	14-26- /
450 x 250	18" x 10"	0.065	Noise Level	22	24	26	28	30	32	33
600 x 200	24" x 8"	0.067	Veff. FPM (m/s)	820 (4.1)	888 (4.4)	956 (4.8)	1025 (5.1)	1093 (5.5)	1161 (5.8)	1229 (6.1)
800 x 150	32" x 6"	0.068	△ Pt (pa)	5.0	7.0	8.0	9.5	9.8	11.0	12.0
400 x 300	16" x 12"	0.069	Th. (m)	7.6-13.0- /	8.4-14.5- /	9.2-15.9- /	10-17.5- /	11.0-19- /	12-20- /	13-23- /
350 x 350	14" x 14"	0.069	Noise Level	21	23	25	27	28	30	31

- Tabulated data are subject to the same notes as in page No.GR - 18.

Tabular Selection for Double Deflection Grilles / Registers
Model SAR & SAG (HFB or VFB) DD

TABLE GR-13

SIZE (L) x (H) mm	SIZE (L) x (H) Inch	$A_{eff.}$ m^2	Flow Rate L/S (CFM)	200 (425)	212 (450)	224 (475)	236 (500)	260 (550)	283 (600)	307 (650)	330 (700)	354 (750)	378 (800)
1300 x 100	52" x 4"	0.070	Veff. FPM (m/s)	552 (2.8)	585 (2.9)	617 (3.1)	650 (3.2)	715 (3.6)	780 (3.9)	844 (4.2)	909 (4.5)	974 (4.9)	1039 (5.2)
850 x 150	34" x 6"	0.072	△ Pt (pa)	1.5	2.0	2.5	3.0	3.5	4.5	5.5	6.1	7.4	7.6
650 x 200	26" x 8"	0.072	Th. (m)	4.5-8.0-18	4.8-8.5-19	5-9.2-19.8	5.5-9.7-21	6.3-11-25	7.3-12.5-29	8.0-14.0- /	8.3-14.9- /	9.5-16.5- /	10.5-18- /
500 x 250	20" x 10"	0.073	Noise Level	<15	<15	<15	<15	16	19	21	23	24	26
1350 x 100	54" x 4"	0.073											
1400 x 100	56" x 4"	0.076	Veff. FPM (m/s)	513 (2.6)	543 (2.7)	573 (2.9)	603 (3.0)	664 (3.3)	724 (3.6)	784 (3.9)	844 (4.2)	905 (4.5)	965 (4.8)
550 x 250	22" x 10"	0.077	△ Pt (pa)	1.0	1.2	1.5	2.3	3.0	3.9	4.5	5.2	6.2	7.0
450 x 300	18" x 12"	0.077	Th. (m)	4.3-7.6-17	4.4-7.7-17.3	4.6-8.1-18.2	5.3-9.5-20	6.0-10.7-24	7.9-12-28	9.1-13.5- /	8.3-14.5- /	9.3-15.8- /	10-17.5- /
700 x 200	28" x 8"	0.078	Noise Level	<15	<15	<15	<15	<15	16	19	20	22	24
400 x 350	16" x 14"	0.080	Veff. FPM (m/s)	479 (2.4)	507 (2.5)	535 (2.7)	563 (2.8)	619 (3.1)	676 (3.4)	732 (3.7)	788 (3.9)	844 (4.2)	901 (4.5)
950 x 150	38" x 6"	0.081	△ Pt (pa)	0.8	1.0	1.3	2.1	2.5	3.0	4.0	4.6	5.2	6.0
750 x 200	30" x 8"	0.084	Th. (m)	4.2-7.5-16.8	4.5-8-17.5	4.7-8.2-18.5	5-9.0-19.5	5.7-10.2-23	6.6-11.5-26	7.5-13-30	8.0-14- /	9.0-15- /	9.7-17- /
600 x 250	24" x 10"	0.085	Noise Level	<15	<15	<15	<15	<15	<15	17	19	21	23
1000 x 150	40" x 6"	0.086	Veff. FPM (m/s)	454 (2.3)	480 (2.4)	507 (2.5)	534 (2.7)	587 (2.9)	641 (3.2)	694 (3.5)	747 (3.7)	801 (4.0)	854 (4.3)
500 x 300	20" x 12"	0.087	△ Pt (pa)	0.7	0.9	1.0	1.5	2.1	2.9	3.5	4.2	5.0	5.8
1050 x 150	42" x 6"	0.088	Th. (m)	4.1-7.3-16.5	4.4-7.8-17.2	4.6-8.4-18.3	4.9-8.9-19.2	5.6-10-23	6.5-11.3-25	7.3-12.9-30	7.9-13.9- /	8.6-14.9- /	9.5-16.5- /
			Noise Level	<15	<15	<15	<15	<15	<15	16	18	20	22
800 x 200	32" x 8"	0.090	Veff. FPM (m/s)	431 (2.2)	457 (2.3)	482 (2.4)	508 (2.5)	558 (2.8)	609 (3.0)	660 (3.3)	711 (3.6)	761 (3.8)	812 (4.1)
450 x 350	18" x 14"	0.090	△ Pt (pa)	0.7	0.8	0.9	1.0	1.5	2.5	3.2	3.8	4.5	5.0
650 x 250	26" x 10"	0.092	Th. (m)	4.0-7.0-16	4.2-7.5-17	4.6-8.0-18	4.8-8.6-19	5.4-9.8-21	6.2-11-25	7.2-12.5-29	7.7-13.5- /	8.5-14.5-/	9.3-16- /
550 x 300	22" x 12"	0.092	Noise Level	<15	<15	<15	<15	<15	<15	16	18	20	21
400 x 400	16" x 16"	0.093											
850 x 200	34" x 8"	0.095	Veff. FPM (m/s)	403 (2.0)	427 (2.1)	450 (2.3)	474 (2.4)	521 (2.6)	569 (2.8)	616 (3.1)	664 (3.3)	711 (3.6)	758 (3.8)
1150 x 150	46" x 6"	0.097	△ Pt (pa)	0.5	0.6	0.7	0.8	1.0	1.5	2.5	3.0	3.6	4.0
700 x 250	28" x 10"	0.100	Th. (m)	3.8-6.6-15	4.1-7.1-16.1	4.3-7.6-17.1	4.6-8.1-18	5.2-9.4-20	6.0-10.5-24	7.0-12-28	7.4-13-30	8.0-14- /	9.0-15- /
900 x 200	36" x 8"	0.101											
600 x 300	24" x 12"	0.101	Noise Level	<15	<15	<15	<15	<15	<15	<15	15	17	19
500 x 350	20" x 14"	0.101											
1200 x 150	48" x 6"	0.102	Veff. FPM (m/s)	378 (1.9)	400 (2.0)	422 (2.1)	444 (2.2)	489 (2.4)	533 (2.7)	578 (2.9)	622 (3.1)	667 (3.3)	711 (3.6)
450 x 400	18" x 16"	0.104	△ Pt (pa)	0.3	0.5	0.6	0.7	0.9	1.4	1.5	2.6	3.3	3.8
550 x 350	22" x 14"	0.106	Th. (m)	3.7-6.5-15	4.0-7.0-16	4.2-7.5-17	4.5-8.0-17.8	5-9.1-19.7	5.7-10.2-21	6.7-11.0-25	7.3-12.8-30	8.0-13.8- /	8.7-14.8- /
950 x 200	38" x 8"	0.107	Noise Level	<15	<15	<15	<15	<15	<15	<15	<15	16	18
750 x 250	30" x 10"	0.107											

- Tabulated data are subject to the same notes as in page No.GR - 18.

Tabular Selection for Double Deflection Grilles / Registers
Model SAR & SAG (HFB or VFB) DD

TABLE GR-14

SIZE (L) x (H) mm	SIZE (L) x (H) Inch	$A_{eff.}$ m^2	Flow Rate L/S (CFM)	401 (850)	425 (900)	448 (950)	472 (1000)	495 (1050)	519 (1100)	543 (1150)	566 (1200)	590 (1250)	613 (1300)
1300 x 100	52" x 4"	0.070	Veff. FPM (m/s)	1104 (5.5)	1169 (5.8)	1234 (6.2)	1299 (6.5)	1364 (6.8)	1429 (7.1)	1494 (7.5)	1559 (7.8)	1624 (8.1)	1689 (8.4)
850 x 150	34" x 6"	0.072	△ Pt (pa)	9.7	10.5	12.0	12.5	14.0	15.0	16.0	18.0	19.0	21.0
650 x 200	26" x 8"	0.072	Th. (m)	11.7-20 - /	12.5-23- /	13-25- /	14.0-26- /	14-29.5- /	15.5- / - /	16.3- / - /	16.5- / - /	18- / - /	19- / - /
500 x 250	20" x 10"	0.073	Noise Level	28	29	30	31	32	33	34	35	36	37
1350 x 100	54" x 4"	0.073											
1400 x 100	56" x 4"	0.076	Veff. FPM (m/s)	1025 (5.1)	1086 (5.4)	1146 (5.7)	1206 (6.0)	1267 (6.3)	1327 (6.6)	1387 (6.9)	1448 (7.2)	1508 (7.5)	1568 (7.8)
550 x 250	22" x 10"	0.077	△ Pt (pa)	8.5	9.0	10.0	10.5	11.0	13.0	14.3	15.0	17.0	18.5
450 x 300	18" x 12"	0.077	Th. (m)	11.0-19- /	12-21.5- /	12.9-23- /	13.2-25- /	14-29.2- /	15- / - /	16- / - /	17- / - /	18.5- / - /	18.7- / - /
700 x 200	28" x 8"	0.078	Noise Level	26	27	28	29	30	31	32	33	35	36
400 x 350	16" x 14"	0.080	Veff. FPM (m/s)	957 (4.8)	1013 (5.1)	1070 (5.3)	1126 (5.6)	1182 (5.9)	1239 (6.2)	1295 (6.5)	1351 (6.8)	1407 (7.0)	1464 (7.3)
950 x 150	38" x 6"	0.081	△ Pt (pa)	7.1	8.0	8.8	9.0	10.0	11.5	12.5	13.5	14.3	15.5
750 x 200	30" x 8"	0.084	Th. (m)	10.8-18.5- /	11.5-19.5- /	12-22.0- /	13-23.0- /	13.5-26- /	14.5-30- /	15- / - /	16- / - /	17- / - /	18- / - /
600 x 250	24" x 10"	0.085	Noise Level	24	25	26	27	29	30	31	32	33	34
1000 x 150	40" x 6"	0.086	Veff. FPM (m/s)	908 (4.5)	961 (4.8)	1014 (5.1)	1068 (5.3)	1121 (5.6)	1175 (5.9)	1228 (6.1)	1281 (6.4)	1335 (6.7)	1388 (6.9)
500 x 300	20" x 12"	0.087	△ Pt (pa)	6.8	7.4	8.1	8.5	9.0	10.0	11.0	12.0	13.0	14.0
1050 x 150	42" x 6"	0.088	Th. (m)	10.5-18- /	10.2-19- /	11.8-20- /	12.5-22- /	13-24- /	14-28- /	14.9-30- /	15.8- / - /	16.5- / - /	17.5- / - /
			Noise Level	23	24	26	27	28	30	31	32	33	34
800 x 200	32" x 8"	0.090	Veff. FPM (m/s)	863 (4.3)	914 (4.6)	964 (4.8)	1015 (5.1)	1066 (5.3)	1117 (5.6)	1168 (5.8)	1218 (6.1)	1269 (6.3)	1320 (6.6)
450 x 350	18" x 14"	0.090	△ Pt (pa)	6.0	6.5	7.0	7.5	8.5	9.0	10.5	11.5	12.0	13.0
650 x 250	26" x 10"	0.092	Th. (m)	10-17.5- /	11-19.0- /	12.0-20- /	12.3-21- /	13-23- /	14-27- /	14.8-30- /	10.5- / - /	16- / - /	17- / - /
550 x 300	22" x 12"	0.092	Noise Level	23	24	25	26	27	29	30	31	32	33
400 x 400	16" x 16"	0.093											
850 x 200	34" x 8"	0.095	Veff. FPM (m/s)	806 (4.0)	853 (4.3)	900 (4.5)	948 (4.7)	995 (5.0)	1043 (5.2)	1090 (5.5)	1137 (5.7)	1185 (5.9)	1232 (6.2)
1150 x 150	46" x 6"	0.097	△ Pt (pa)	5.0	5.5	6.0	6.3	7.2	7.4	8.4	9.0	9.8	10.5
700 x 250	28" x 10"	0.100	Th. (m)	9.7-15.8- /	10.2-18- /	10.3-19- /	11.2-19.5- /	12.2-21- /	13-25- /	13.8-27- /	14.8-30- /	15.2- / - /	16.1- / - /
900 x 200	36" x 8"	0.101											
600 x 300	24" x 12"	0.101	Noise Level	21	22	23	24	25	26	27	28	29	30
500 x 350	20" x 14"	0.101											
1200 x 150	48" x 6"	0.102	Veff. FPM (m/s)	756 (3.8)	800 (4.0)	844 (4.2)	889 (4.4)	933 (4.7)	978 (4.9)	1022 (5.1)	1067 (5.3)	1111 (5.6)	1156 (5.8)
450 x 400	18" x 16"	0.104	△ Pt (pa)	4.6	5.0	5.3	6.0	6.7	7.0	7.5	8.2	9.0	9.8
550 x 350	22" x 14"	0.106	Th. (m)	9.4-16.2- /	10-17.5- /	10.2-18.5- /	11-19.2- /	12-20- /	12.8-23- /	14-27- /	14.2-29- /	27- / - /	30- / - /
950 x 200	38" x 8"	0.107	Noise Level	20	21	22	23	24	25	26	27	28	29
750 x 250	30" x 10"	0.107											

- Tabulated data are subject to the same notes as in page No.GR - 18.

Tabular Selection for Double Deflection Grilles / Registers
Model SAR & SAG (HFB or VFB) DD

TABLE GR-15

SIZE (L) x (H) mm	SIZE (L) x (H) Inch	A eff. m²	Flow Rate L/S (CFM)	637 (1350)	661 (1400)	684 (1450)	708 (1500)	731 (1550)	755 (1600)	779 (1650)	802 (1700)	826 (1750)	849 (1800)
1300 x 100	52" x 4"	0.070	Veff. FPM (m/s)	1754 (8.8)	1819 (9.1)	1884 (9.4)							
850 x 150	34" x 6"	0.072	△ Pt (pa)	22.0	25.0	27.0							
650 x 200	26" x 8"	0.072	Th. (m)	20- / - /	23- / - /	25- / - /							
500 x 250	20" x 10"	0.073	Noise Level	38	39	40							
1350 x 100	54" x 4"	0.073											
1400 x 100	56" x 4"	0.076	Veff. FPM (m/s)	1629 (8.1)	1689 (8.4)	1749 (8.7)	1810 (9.0)						
550 x 250	22" x 10"	0.077	△ Pt (pa)	20.0	22.0	24.0	26.0						
450 x 300	18" x 12"	0.077	Th. (m)	19.5- / - /	21- / - /	23- / - /	25- / - /						
700 x 200	28" x 8"	0.078	Noise Level	37	38	39	40						
400 x 350	16" x 14"	0.080	Veff. FPM (m/s)	1520 (7.6)	1576 (7.9)	1633 (8.2)	1689 (8.4)	1745 (8.7)					
950 x 150	38" x 6"	0.081	△ Pt (pa)	17.0	18.5	20.0	21.0	21.3					
750 x 200	30" x 8"	0.084	Th. (m)	18.8- / - /	20- / - /	21- / - /	23- / - /	25- / - /					
600 x 250	24" x 10"	0.085	Noise Level	35	36	37	38	39					
1000 x 150	40" x 6"	0.086	Veff. FPM (m/s)	1441 (7.2)	1495 (7.5)	1548 (7.7)	1602 (8.0)	1655 (8.3)	1708 (8.5)	1762 (8.8)	1815 (9.1)		
500 x 350	20" x 14"	0.087	△ Pt (pa)	15.2	16.0	17.5	19.0	20.0	21.0	21.2	25.0		
1050 x 150	42" x 6"	0.088	Th. (m)	18.2- / - /	19.4- / - /	20.2- / - /	22.5- / - /	24- / - /	25- / - /	27- / - /	28- / - /		
			Noise Level	35	35	36	37	38	39	39	40		
800 x 200	32" x 8"	0.090	Veff FPM (m/s)	1371 (6.9)	1421 (7.1)	1472 (7.4)	1523 (7.6)	1574 (7.9)	2624 (8.1)	1675 (8.4)	1726 (8.6)	1777 (8.9)	
450 x 350	18" x 14"	0.090	△ Pt (pa)	14.0	15.5	16.0	17.5	19.0	20.0	20.5	21.0	25.0	
650 x 250	26" x 10"	0.092	Th. (m)	18- / - /	19- / - /	20- / - /	22- / - /	23- / - /	24- / - /	25- / - /	27- / - /	29- / - /	
550 x 300	22" x 12"	0.092	Noise Level	34	35	35	36	37	38	38	39	40	
400 x 400	16" x 16"	0.093											
850 x 200	34" x 8"	0.095	Veff. FPM (m/s)	1280 (6.4)	1327 (6.6)	1374 (6.9)	1422 (7.1)	1469 (7.3)	1517 (7.6)	1564 (7.8)	1611 (8.1)	1659 (8.3)	1706 (8.5)
1150 x 150	46" x 6"	0.097	△ Pt (pa)	11.0	11.5	13.5	14.5	16.0	16.4	17.0	18.0	19.0	20.0
700 x 250	28" x 10"	0.100	Th. (m)	17- / - /	18.5- / - /	19- / - /	19.5- / - /	21- / - /	22- / - /	23- / - /	25- / - /	27- / - /	28- / - /
900 x 200	36" x 8"	0.101											
600 x 300	24" x 12"	0.101	Noise Level	31	32	33	34	35	36	37	37	38	39
500 x 350	20" x 14"	0.101											
1200 x 150	48" x 6"	0.102	Veff. FPM (m/s)	1200 (6.0)	1245 (6.2)	1289 (6.4)	1333 (6.7)	1378 (6.9)	1422 (7.1)	1467 (7.3)	1511 (7.6)	1556 (7.8)	1600 (8.0)
450 x 400	18" x 16"	0.104	△ Pt (pa)	10.5	11.5	13.0	14.0	14.2	15.0	16.0	16.4	18.5	19.0
550 x 350	22" x 14"	0.106	Th. (m)	—	—	—	—	—	—	—	—	—	—
950 x 200	38" x 8"	0.107	Noise Level	30	31	32	33	34	34	35	35	36	37
750 x 250	30" x 10"	0.107											

- Tabulated data are subject to the same notes as in page No.GR - 18.

Tabular Selection for Double Deflection Grilles / Registers
Model SAR & SAG (HFB or VFB) DD

TABLE GR-16

SIZE (L) x (H) mm	SIZE (L) x (H) Inch	A eff. m²	Flow Rate L/S (CFM)	330 (700)	354 (750)	378 (800)	401 (850)	425 (900)	448 (950)	472 (1000)	495 (1050)	519 (1100)	543 (1150)
650 x 300	26" x 12"	0.109	Veff. FPM (m/s)	583 (2.9)	625 (3.1)	667 (3.3)	708 (3.5)	750 (3.7)	791 (4.0)	833 (4.2)	875 (4.4)	916 (4.6)	958 (4.8)
1300 x 150	52" x 6"	0.110	△ Pt (pa)	2.1	2.7	3.3	3.9	4.3	4.6	5.0	5.3	5.6	6.6
1000 x 200	40" x 8"	0.113	Th. (m)	7.2-12.2-28	7.7-13.5- /	8.3-14.5- /	9.2-15.5- /	9.7-16.9- /	10.5-18- /	10.8-18.5- /	11.5-19.5- /	12.5-21.9- /	13-24- /
1350 x 150	54" x 6"	0.114	Noise Level	<15	15	16	19	20	21	22	23	24	25
800 x 250	32" x 10"	0.115	Veff. FPM (m/s)	561 (2.8)	601 (3.0)	641 (3.2)	681 (3.4)	721 (3.6)	761 (3.8)	801 (4.0)	841 (4.2)	881 (4.4)	921 (4.6)
500 x 400	20" x 16"	0.116	△ Pt (pa)	1.6	2.3	2.9	3.4	3.8	4.2	4.4	4.8	5.2	6.0
450 x 450	18" x 18"	0.116	Th. (m)	7-12-28.2	7.5-13- /	8.0-14- /	9-15- /	9.4-16- /	9.9-17.3- /	10.4-17- /	11.0-19- /	12.0-12- /	12.8-23- /
1050 x 200	42" x 8"	0.116	Noise Level	<15	<15	15	17	19	20	21	22	23	24
600 x 350	24" x 14"	0.117											
700 x 300	28" x 12"	0.119	Veff. FPM (m/s)	529 (2.6)	566 (2.8)	604 (3.0)	642 (3.2)	680 (3.4)	717 (3.6)	755 (3.8)	793 (4.0)	831 (4.2)	869 (4.3)
1400 x 150	56" x 6"	0.119											
850 x 250	34" x 10"	0.121	△ Pt (pa)	1.3	1.6	2.3	3.0	3.3	3.7	3.8	4.4	4.8	5.2
1100 x 200	44" x 8"	0.122											
1450 x 150	58" x 6"	0.123	Th. (m)	6.7-11.5-28	7.2-12.5-30	7.8-13.5- /	8.5-14.5- /	9.2-15.5- /	9.4-16- /	9.7-16.9- /	10.5-18.5- –/	12.0-20- /	12.4-22- /
550 x 400	22" x 16"	0.123											
750 x 300	30" x 12"	0.127	Noise Level	<15	<15	<15	16	17	18	19	20	21	22
650 x 350	26" x 14"	0.127											
1500 x 150	60" x 6"	0.128	Veff. FPM (m/s)	494 (2.5)	530 (2.6)	565 (2.8)	600 (3.0)	636 (3.2)	671 (3.4)	706 (3.5)	742 (3.7)	777 (3.9)	812 (4.1)
1150 x 200	46" x 8"	0.128	△ Pt (pa)	0.8	1.3	1.5	2.3	2.7	3.0	3.2	3.6	4.1	4.3
900 x 250	36" x 10"	0.129	Th. (m)	6.3-11-25	7.1-12.2-28	7.7-13.2- /	8.3-14.2- /	9.0-15- /	9.3-16- /	9.5-16.5- /	10.2-18- /	11.0-19- /	11.8-20- /
500 x 450	20" x 18"	0.130											
1200 x 200	48" x 8"	0.134	Noise Level	<15	<15	<15	<15	15	17	18	19	20	21
600 x 400	24" x 16"	0.135											
950 x 250	38" x 10"	0.136	Veff. FPM (m/s)	473 (2.4)	507 (2.5)	540 (2.7)	574 (2.9)	608 (3.0)	642 (3.2)	676 (3.4)	709 (3.5)	743 (3.7)	777 (3.9)
800 x 300	32" x 12"	0.136	△ Pt (pa)	0.7	1.0	1.3	1.9	2.3	2.7	3.0	3.3	3.6	4.1
700 x 350	28" x 14"	0.137	Th. (m)	6.1-10.8-23	7.0-12-27	7.5-13- /	8.0-14- /	8.6-14.5- /	9.1-15.5- /	9.4-16- /	10-17- /	10.8-18.9- /	11.5-19.8- /
550 x 450	22" x 18"	0.137	Noise Level	<15	<15	<15	<15	<15	16	17	18	19	20
1250 x 200	50" x 8"	0.139											
1000 x 250	40" x 10"	0.144	Veff. FPM (m/s)	447 (2.2)	479 (2.4)	511 (2.6)	543 (2.7)	575 (2.9)	607 (3.0)	638 (3.0)	670 (3.4)	702 (3.5)	734 (3.7)
850 x 300	34" x 12"	0.144	△ Pt (pa)	0.6	0.7	0.9	1.3	1.8	2.0	2.3	2.8	3.3	3.6
1300 x 200	52" x 8"	0.145	Th. (m)	5.9-10.5-22	6.6-11.8-26	7.3-12.8-30	7.9-13.5- /	8.3-14.4- /	8.9-15- /	9.3-15.8- /	9.9-17- /	10.7-18.5- /	11.0-19- /
650 x 400	26" x 16"	0.146											
500 x 500	20" x 20"	0.146	Noise Level	<15	<15	<15	<15	<15	<15	15	17	18	19
750 x 350	30" x 14"	0.147											

- Tabulated data are subject to the same notes as in page No.GR - 18.

Tabular Selection for Double Deflection Grilles / Registers
Model SAR & SAG (HFB or VFB) DD

TABLE GR-17

SIZE (L) x (H) mm	SIZE (L) x (H) Inch	$A_{eff.}$ m^2	Flow Rate L/S (CFM)	566 (1200)	590 (1250)	613 (1300)	637 (1350)	661 (1400)	684 (1450)	708 (1500)	731 (1550)	755 (1600)	779 (1650)
650 x 300	26" x 12"	0.109	Veff. FPM (m/s)	1000 (5.5)	1041 (5.2)	1083 (5.4)	1125 (5.6)	1166 (5.8)	1208 (6.0)	1250 (6.2)	1291 (6.5)	1333 (6.7)	1375 (6.9)
1300 x 150	52" x 6"	0.110	△ Pt (pa)	7.1	7.8	8.5	9.0	9.8	11.0	11.5	11.6	13.0	13.5
1000 x 200	40" x 8"	0.113	Th. (m)	13.9-27- /	14.5-29- /	15- / - /	16- / - /	17- / - /	18- / - /	18.5- / - /	19.5-- / - /	20- / - /	21- / - /
1350 x 150	54" x 6"	0.114	Noise Level	26	27	28	29	30	31	32	33	33	34
800 x 250	32" x 10"	0.115	Veff. FPM (m/s)	961 (4.8)	1001 (5.0)	1041 (5.2)	1081 (5.4)	1121 (5.6)	1161 (5.8)	1201 (6.0)	1241 (6.2)	1281 (6.4)	1321 (6.6)
500 x 400	20" x 16"	0.116	△ Pt	6.6	7.0	7.8	8.0	8.6	9.4	10.0	10.5	11.5	12.0
450 x 450	18" x 18"	0.116	Th. (m)	13.4-25- /	14-28- /	14.8-30- /	15.5- / - /	16.5- / - /	17.5- / - /	18- / - /	19- / - /	19.5- / - /	20- / - /
1050 x 200	42" x 8"	0.116	Noise Level	25	26	27	28	29	30	31	31	32	33
600 x 350	24" x 14"	0.117											
700 x 300	28" x 12"	0.119	Veff. FPM (m/s)	906 (4.5)	944 (4.7)	982 (4.9)	1020 (5.1)	1057 (5.3)	1095 (5.5)	1133 (5.7)	1171 (5.9)	1208 (6.0)	1246 (6.2)
1400 x 150	56" x 6"	0.119											
850 x 250	34" x 10"	0.121	△ Pt (pa)	5.3	6.2	6.6	7.1	7.8	8.5	9.0	9.4	9.8	10.5
1100 x 200	44" x 8"	0.122											
1450 x 150	58" x 6"	0.123	Th. (m)	13.0-24- /	13.8-27- /	14.2-29- /	15.0-30- /	16- / - /	17- / - /	17.5- / - /	18- / - /	19- / - /	19.5- / - /
550 x 400	22" x 16"	0.123											
750 x 300	30" x 12"	0.127	Noise Level	23	24	25	26	27	28	29	30	30	31
650 x 350	26" x 14"	0.127											
1500 x 150	60" x 6"	0.128	Veff. FPM (m/s)	848 (4.2)	883 (4.4)	918 (4.6)	954 (4.8)	989 (4.9)	1024 (5.1)	1060 (5.3)	1095 (5.5)	1130 (5.7)	1166 (5.8)
1150 x 200	46" x 8"	0.128	△ Pt (pa)	4.6	5.0	5.3	6.0	6.6	6.8	7.8	8.0	8.5	9,0
900 x 250	36" x 10"	0.129	Th. (m)	12.5-24- /	13-24.4- /	13.8-27- /	14.4-29- /	15- / - /	16- / - /	16.9- / - /	17.5- / - /	18- / - /	18.5- / - /
500 x 450	20" x 18"	0.130											
1200 x 200	48" x 8"	0.134	Noise Level	22	23	24	25	26	27	28	29	29	30
600 x 400	24" x 16"	0.135											
950 x 250	38" x 10"	0.136	Veff. FPM (m/s)	811 (4.1)	844 (4.2)	878 (4.4)	912 (4.6)	946 (4.7)	980 (4.9)	1013 (5.1)	1047 (5.2)	1081 (5.4)	1115 (5.6)
800 x 300	32" x 12"	0.136	△ Pt (pa)	4.3	4.8	5.0	5.2	6.2	6.6	6.8	7.1	7.8	7.0
700 x 350	28" x 14"	0.137	Th. (m)	12.0-21- /	12.8-23- /	13.5-26- /	14.0-28- /	14.9-30- /	15- / - /	16.4- / - /	16.9- / - /	17.5- / - /	18- / - /
550 x 450	22" x 18"	0.137	Noise Level	21	22	23	24	25	26	27	28	28	29
1250 x 200	50" x 8"	0.139											
1000 x 250	40" x 10"	0.144	Veff. FPM (m/s)	766 (3.8)	798 (4.0)	830 (4.1)	862 (4.3)	894 (4.5)	926 (4.6)	958 (4.8)	990 (4.9)	1022 (5.1)	1053 (5.3)
850 x 300	34" x 12"	0.144	△ Pt (pa)	3.8	4.3	4.6	5.0	5.3	5.8	6.2	6.6	7.0	7.3
1300 x 200	52" x 8"	0.145	Th. (m)	11.9-20- /	12.5-22- /	12.8-23- /	13.0-24- /	14.7-27- /	15- / - /	15.8- / - /	16.5- / - /	17- / - /	17.9- / - /
650 x 400	26" x 16"	0.146											
500 x 500	20" x 20"	0.146	Noise Level	20	21	22	23	24	25	26	26	27	28
750 x 350	30" x 14"	0.147											

- Tabulated data are subject to the same notes as in page No.GR - 18.

Tabular Selection for Double Deflection Grilles / Registers
Model SAR & SAG (HFB or VFB) DD

TABLE GR-18

SIZE (L) x (H) mm	SIZE (L) x (H) Inch	$A_{eff.}$ m^2	Flow Rate L/S (CFM)	802 (1700)	826 (1750)	849 (1800)	873 (1850)	897 (1900)	920 (1950)	944 (2000)	967 (2050)	991 (2100)	1015 (2150)
650 x 300	26" x 12"	0.109	Veff. FPM (m/s)	1416 (7.1)	1458 (7.3)	1500 (7.5)	1541 (7.7)	1583 (7.9)	1625 (8.1)	1666 (8.3)	1708 (8.5)	1750 (8.7)	1791 (9.0)
1300 x 150	52" x 6"	0.110	△ Pt (pa)	14.2	15.0	16.2	17.0	17.5	18.4	19.5	20.5	22.0	23.0
1000 x 200	40" x 8"	0.113	Th. (m)	22- / - /	24- / - /	25- / - /	27- / - /	28- / - /	30- / - /	—	—	—	—
1350 x 150	54" x 6"	0.114	Noise Level	35	35	36	37	37	38	39	39	40	40
800 x 250	32" x 10"	0.115	Veff. FPM (m/s)	1361 (6.8)	1401 (7.0)	1441 (7.2)	1481 (7.4)	1522 (7.6)	1562 (7.8)	1602 (8.0)	1642 (8.2)	1682 (8.4)	1722 (8.6)
500 x 400	20" x 16"	0.116	△ Pt (pa)	13.0	13.8	14.2	15.0	16.0	16.2	17.2	18.4	18.8	21.0
450 x 450	18" x 18"	0.116	Th. (m)	21- / - /	23- / - /	24- / - /	26- / - /	27- / - /	29- / - /	30- / - /	—	—	—
1050 x 200	42" x 8"	0.116	Noise Level	33	34	35	35	36	36	37	38	38	39
600 x 350	24" x 14"	0.117											
700 x 300	28" x 12"	0.119	Veff. FPM (m/s)	1284 (6.4)	1322 (6.6)	1359 (6.8)	1397 (7.0)	1435 (7.2)	1473 (7.4)	1510 (7.6)	1548 (7.7)	1586 (7.9)	1624 (8.1)
1400 x 150	56" x 6"	0.119											
850 x 250	34" x 10"	0.121	△ Pt (pa)	11.0	12.0	11.6	13.1	13.9	14.2	15.5	16.2	17.0	18.0
1100 x 200	44" x 8"	0.122											
1450 x 150	58" x 6"	0.123	Th. (m)	20- / - /	21.5- / - /	23- / - /	24- / - /	26- / - /	27- / - /	28- / - /	30- / - /	—	—
550 x 400	22" x 16"	0.123											
750 x 300	30" x 12"	0.127	Noise Level	32	32	33	34	35	35	36	36	37	37
650 x 350	26" x 14"	0.127											
1500 x 150	60" x 6"	0.128	Veff. FPM (m/s)	1201 (6.0)	1236 (6.2)	1272 (6.4)	1307 (6.5)	1342 (607)	1378 (6.9)	1413 (7.1)	1448 (7.2)	1483 (7.4)	1519 (7.6)
1150 x 200	46" x 8"	0.128	△ Pt (pa)	9.4	9.8	10.5	11.0	11.5	12.0	13.0	13.8	14.2	15.0
900 x 250	36" x 10"	0.129	Th. (m)	19- / - /	20- / - /	20.5- / - /	22- / - /	24- / - /	25- / - /	26- / - /	28 - / - /	30 - / - /	—
500 x 450	20" x 18"	0.130											
1200 x 200	48" x 8"	0.134	Noise Level	31	31	32	33	33	34	34	35	36	36
600 x 400	24" x 16"	0.135											
950 x 250	38" x 10"	0.136	Veff. FPM (m/s)	1149 (5.7)	1182 (5.9)	1216 (6.1)	1250 (6.2)	1284 (6.4)	1317 (6.6)	1351 (6.8)	1385 (6.9)	1419 (7.1)	1453 (7.3)
800 x 300	32" x 12"	0.136	△ Pt (pa)	8.6	9.0	9.4	10.0	10.5	11.4	12.0	13.0	13.1	14.0
700 x 350	28" x 14"	0.137	Th. (m)	18.8- / - /	19.3- / - /	20- / - /	21- / - /	23- / - /	24- / - /	25.5- / - /	27- / - /	29- / - /	30- / - /
550 x 450	22" x 18"	0.137	Noise Level	29	30	31	32	32	33	33	34	35	35
1250 x 200	50" x 8"	0.139											
1000 x 250	40" x 10"	0.144	Veff. FPM (m/s)	1085 (5.4)	1117 (5.6)	1149 (5.7)	1181 (5.9)	1213 (6.1)	1245 (6.2)	1277 (6.4)	1309 (6.5)	1341 (6.7)	1373 (6.9)
850 x 300	34" x 12"	0.144	△ Pt (pa)	7.8	8.0	8.5	9.0	9.4	10.0	10.5	11.0	11.4	12.5
1300 x 200	52" x 8"	0.145	Th. (m)	18.3- / - /	19- / - /	19.5- / - /	20- / - /	22- / - /	23- / - /	24- / - /	26- / - /	27- / - /	28- / - /
650 x 400	26" x 16"	0.146											
500 x 500	20" x 20"	0.146	Noise Level	28	29	29	30	30	31	32	33	34	34
750 x 350	30" x 14"	0.147											

- Tabulated data are subject to the same notes as in page No.GR - 18.

Tabular Selection for Double Deflection Grilles / Registers
Model SAR & SAG (HFB or VFB) DD

TABLE GR-19

SIZE (L) x (H) mm	SIZE (L) x (H) Inch	$A_{eff.}$ m^2	Flow Rate L/S (CFM)	472 (1000)	496 (1050)	519 (1100)	543 (1150)	566 (1200)	590 (1250)	613 (1300)	661 (1400)	708 (1500)	755 (1600)
1050 x 250	42"x10"	0.148	Veff. FPM (m/s)	615 (3.1)	646 (3.2)	677 (3.4)	707 (3.5)	738 (3.7)	769 (3.8)	800 (4.0)	861 (4.3)	923 (4.6)	984 (4.9)
1350 x 200	54"x 8"	0.151	△ Pt (pa)	2.1	2.6	3.0	3.3	3.6	3.9	4.3	5.0	5.6	6.4
600 x 450	24"x18"	0.151	Th. (m)	9-15.1- /	9.5-16.5- /	10.5-18- /	11-19- /	11.8-19.8- /	12.1-21- /	13-24- /	14.2-28- /	15.5-/- /	16.8- /- /
900 x 300	36"x12"	0.154	Noise Level	<15	<15	17	18	19	20	21	23	24	26
550 x 500	22"x20"	0.154											
1100 x 250	44"x10"	0.156	Veff. FPM (m/s)	584 (2.9)	613 (3.1)	643 (3.2)	672 (3.4)	701 (3.5)	730 (3.7)	760 (3.8)	818 (4.1)	876 (4.4)	935 (4.7)
1400 x 200	56"x 8"	0.157	△ Pt (pa)	1.6	2.0	2.3	2.9	3.2	3.3	3.8	4.4	5.0	5.8
800 x 350	32"x14"	0.158	Th. (m)	9-15.0- /	9.3-16- /	10-17.5- /	10.5-18.2- /	11.2-19.2- /	11.7-20- /	12.5-22- /	13.8-26- /	15- /- /	16.2- /- /
700 x 400	28"x16"	0.159											
950 x 300	38"x12"	0.162	Noise Level	<15	<15	15	17	18	19	20	21	23	25
1450 x 200	58"x 8"	0.162											
1150 x 250	46"x10"	0.163	Veff. FPM (m/s)	556 (2.8)	584 (2.9)	612 (3.1)	640 (3.2)	667 (3.3)	695 (3.5)	723 (3.6)	779 (3.9)	834 (4.2)	890 (4.4)
650 x 450	26"x18"	0.164											
850 x 350	34"x14"	0.167	△ Pt (pa)	1.4	1.5	2.0	2.3	2.7	3.0	3.2	3.8	4.5	5.0
1500 x 200	60"x 8"	0.169											
750 x 400	30"x16"	0.170	Th. (m)	8.4-14.5- /	9-15.3- /	9.6-16.8- /	10.2-17.5- /	10.6-18.5- /	11.4-19.5- /	12-21- /	13.3-25- /	14.8-30- /	15.7-/- /
600 x 500	24"x20"	0.170											
1200 x 250	48"x10"	0.171	Noise Level	<15	<15	<15	<15	15	17	18	20	22	23
1000 x 300	40"x12"	0.171											
1050 x 300	42"x12"	0.176	Veff. FPM (m/s)	525 (2.6)	551 (2.8)	577 (2.9)	604 (3.0)	630 (3.1)	656 (3.3)	682 (3.4)	735 (3.7)	787 (3.9)	840 (4.2)
1250 x 250	50"x10"	0.178	△ Pt (pa)	0.8	1.0	1.4	1.6	1.9	2.3	2.7	3.2	3.8	4.2
900 x 350	36"x12"	0.178	Th. (m)	8.2-14- /	8.7-14.8- /	9.3-16- /	9.7-17- /	10.3-18- /	11-19- /	11.8-20- /	12.8-23- /	14-28- /	15- /- /
700 x 450	28"x18"	0.178	Noise Level	<15	<15	<15	<15	<15	<15	15	18	20	21
800 x 400	32"x16"	0.183	Veff. FPM (m/s)	495 (2.5)	520 (2.6)	545 (2.7)	570 (2.8)	595 (3.0)	619 (3.1)	644 (3.2)	694 (3.5)	743 (3.7)	793 (4.0)
650 x 500	26"x20"	0.184	△ Pt (pa)	0.7	0.8	1.0	1.4	1.6	1.9	2.3	3.0	3.4	3.8
1100 x 300	44"x12"	0.185											
1300 x 250	52"x10"	0.186	Th. (m)	8-14- /	8.5-14.5- /	9.2-16- /	9.5-16.5- /	10-17.5- /	10.6-18.5- /	11.3-19.3- /	12.8-23- /	13.8-26- /	14.8-30- /
950 x 350	38"x14"	0.188											
750 x 450	30"x18"	0.190	Noise Level	<15	<15	<15	<15	<15	<15	<15	17	19	20
1350 x 250	54"x10"	0.192											
1150 x 300	46"x12"	0.194	Veff. FPM (m/s)	472 (2.4)	495 (2.5)	519 (2.6)	542 (2.7)	566 (2.8)	589 (2.9)	613 (3.1)	660 (3.3)	707 (3.5)	754 (3.8)
850 x 400	34"x16"	0.194	△ Pt (pa)	0.6	0.7	0.8	1.0	1.4	1.6	1.9	2.7	3.2	3.4
1000 x 350	40"x14"	0.199	Th. (m)	7.8-13.5- /	8.3-14.2- /	9-15- /	9.3-16- /	9.7-17- /	10.3-18- /	11-19- /	12.3-22- /	13.5-26- /	14.5-28- /
700 x 500	28"x20"	0.199	Noise Level	<15	<15	<15	<15	<15	<15	<15	15	18	17
1400 x 250	56"x10"	0.200											

- Tabulated data are subject to the same notes as in page No.GR - 18.

Tabular Selection for Double Deflection Grilles / Registers
Model SAR & SAG (HFB or VFB) DD

TABLE GR-20

SIZE (L) x (H) mm	SIZE (L) x (H) Inch	$A_{eff.}$ m^2	Flow Rate L/S (CFM)	802 (1700)	849 (1800)	897 (1900)	944 (2000)	991 (2100)
1050 x 250	42"x10"	0.148	Veff. FPM (m/s)	1046 (5.2)	1107 (5.5)	1169 (5.8)	1230 (6.2)	1292 (6.5)
1350 x 200	54"x 8"	0.151	△ Pt (pa)	7.0	8.0	9.0	9.8	11.5
600 x 450	24"x18"	0.151	Th. (m)	18-/ - /	19.2- / - /	21- / - /	23- / - /	27- / - /
900 x 300	36"x12"	0.154	Noise Level	27	28	30	31	32
550 x 500	22"x20"	0.154						
1100 x 250	44"x10"	0.156	Veff. FPM (m/s)	993 (5.5)	1052 (5.3)	1110 (5.6)	1168 (5.8)	1227 (6.1)
1400 x 200	56"x 8"	0.157	△ Pt (pa)	6.4	7.0	8.0	8.8	9.8
800 x 350	32"x14"	0.158	Th. (m)	17.5-/ - /	18.6- / - /	19.8- / - /	22- / - /	25- / - /
700 x 400	28"x16"	0.159						
950 x 300	38"x12"	0.162	Noise Level	26	27	29	30	31
1450 x 200	58"x 8"	0.162						
1150 x 250	46"x10"	0.163	Veff. FPM (m/s)	946 (4.7)	1001 (5.0)	1057 (5.3)	1112 (5.6)	1168 (5.8)
650 x 450	26"x18"	0.164						
850 x 350	34"x14"	0.167	△ Pt (pa)	5.6	6.2	6.9	7.8	8.3
1500 x 200	60"x 8"	0.169						
750 x 400	30"x16"	0.170	Th. (m)	17- / - /	18- / - /	19- / - /	21- / - /	23- / - /
600 x 500	24"x20"	0.170						
1200 x 250	48"x10"	0.171	Noise Level	24	25	27	28	29
1000 x 300	40"x12"	0.171						
1050 x 300	42"x12"	0.176	Veff. FPM (m/s)	892 (4.5)	945 (4.7)	997 (5.0)	1050 (5.2)	1102 (5.5)
1250 x 250	50"x10"	0.178	△ Pt (pa)	4.4	5.2	6.0	6.6	7.0
900 x 350	36"x12"	0.178	Th. (m)	16- / - /	16.5- / - /	18.5- / - /	19.8- / - /	22- / - /
700 x 450	28"x18"	0.178	Noise Level	22	24	25	26	27
800 x 400	32"x16"	0.183	Veff. FPM (m/s)	842 (4.2)	892 (4.5)	941 (4.7)	991 (5.0)	1040 (5.2)
650 x 500	26"x20"	0.184	△ Pt (pa)	4.3	4.8	5.6	6.0	6.6
1100 x 300	44"x12"	0.185						
1300 x 250	52"x10"	0.186	Th. (m)	15.8-/ - /	17- / - /	18- / - /	19- / - /	21- / - /
950 x 350	38"x14"	0.188						
750 x 450	30"x18"	0.190	Noise Level	21	22	24	25	26
1350 x 250	54"x10"	0.192						
1150 x 300	46"x12"	0.194	Veff. FPM (m/s)	802 (4.0)	849 (4.2)	896 (4.5)	943 (4.7)	990 (5.0)
850 x 400	34"x16"	0.194	△ Pt (pa)	3.9	4.4	4.8	5.6	6.0
1000 x 350	40"x14"	0.199	Th. (m)	15.3- / - /	16.5- / - /	17.8- / - /	19- / - /	20- / - /
700 x 500	28"x20"	0.199	Noise Level	20	22	23	24	25
1400 x 250	56"x10"	0.200						

- Tabulated data are subject to the same notes as in page No.GR - 18.

Tabular Selection for Double Deflection Grilles / Registers
Model SAR & SAG (HFB or VFB) DD

TABLE GR-21

SIZE (L) x (H) mm	SIZE (L) x (H) Inch	A eff. m²	Flow Rate L/S (CFM)	566 (1200)	613 (1300)	661 (1400)	708 (1500)	755 (1600)	802 (1700)	849 (1800)	897 (1900)	944 (2000)	991 (2100)
1200 x 300	48" x 12"	0.203	Veff. FPM (m/s)	536 (2.7)	581 (2.9)	625 (3.1)	670 (3.3)	715 (3.6)	759 (3.8)	804 (4.0)	849 (4.2)	893 (4.5)	938 (4.7)
1050 x 350	42" x 14"	0.204	△ Pt (pa)	1.0	1.5	2.0	2.7	3.0	3.4	3.9	4.3	4.8	5.3
800 x 450	32" x 18"	0.204											
900 x 400	36" x 16"	0.206	Th. (m)	9.5-16.5- /	10.6-18.4- /	11.8-20- /	13-24- /	14-27- /	14.8- /- /	16- /- /	17- /- /	18.5- /- /	19.5- /- /
1450 x 250	58" x 10"	0.207											
1250 x 300	50" x 12"	0.211	Noise Level	<15	<15	15	17	18	19	21	22	23	25
750 x 500	30" x 20"	0.213											
1500 x 250	60" x 10"	0.215	Veff. FPM (m/s)	508 (2.5)	550 (2.8)	592 (3.0)	635 (3.2)	677 (3.4)	719 (3.6)	762 (3.8)	804 (4.0)	846 (4.2)	889 (4.4)
1100 x 350	44" x 14"	0.215	△ Pt (pa)	0.8	1.0	1.6	2.3	2.7	3.2	3.5	3.9	4.3	4.8
950 x 400	38" x 16"	0.217	Th. (m)	9.3-15- /	10.4-18- /	11.6-19.8- /	12.8-23- /	13.6-26.5- /	14.5-30- /	15.3- /- /	16.5- /- /	17.8- /- /	18- /- /
850 x 450	34" x 18"	0.217											
1300 x 300	52" x 12"	0.221	Noise Level	<15	<15	<15	15	16	18	20	21	22	23
1150 x 350	46" x 14"	0.224											
800 x 500	32" x 20"	0.229	Veff. FPM (m/s)	479 (2.4)	519 (2.6)	559 (2.8)	599 (3.0)	639 (3.2)	679 (3.4)	719 (3.6)	759 (3.8)	799 (4.0)	839 (4.2)
1350 x 300	54" x 12"	0.229	△ Pt (pa)	0.6	0.7	1.0	1.5	2.0	2.3	2.7	3.2	3.6	3.8
1000 x 400	40" x 16"	0.230	Th. (m)	9-14.5- /	9.7-17- /	11-19- /	12.3-22.5- /	13-23- /	14-27.5- /	14.8-30- /	16- /- /	17-/- /	18- /- /
900 x 450	36" x 18"	0.231											
1200 x 350	48" x 14"	0.235	Noise Level	<15	<15	<15	<15	15	16	17	18	20	21
1050 x 400	42" x 16"	0.236											
1400 x 300	56" x 12"	0.238	Veff. FPM (m/s)	458 (2.3)	496 (2.5)	534 (2.7)	572 (2.9)	610 (3.1)	649 (3.2)	687 (3.4)	725 (3.6)	763 (3.8)	801 (4.0)
950 x 450	38" x 18"	0.243	△ Pt (pa)	0.4	0.6	0.7	1.0	1.4	1.5	2.3	2.7	3.1	3.4
850 x 500	34" x 20"	0.243	Th. (m)	8.6-14.4- /	9.5-16.5- /	10.5-18- /	11.8-20- /	12.8-23- /	13.5-26- /	14.3-28- /	15- /- /	16.4- /- /	17.5- /- /
1250 x 350	50" x 14"	0.245											
1450 x 300	58" x 12"	0.246	Noise Level	<15	<15	<15	<15	<15	15	16	17	19	20
1100 x 400	44" x 16"	0.249											
1500 x 300	60" x 12"	0.256	Veff. FPM (m/s)	428 (2.1)	464 (2.3)	499 (2.5)	535 (2.7)	571 (2.9)	606 (3.0)	642 (3.2)	678 (3.4)	713 (3.6)	749 (3.7)
1300 x 350	52" x 14"	0.256	△ Pt (pa)	0.3	0.4	0.6	0.8	1.0	1.4	1.5	2.2	2.7	3.1
1000 x 450	40" x 18"	0.257											
900 x 500	36" x 20"	0.259	Th. (m)	8.3-14.1- /	9.3-16- /	10.3-18- /	11.5-19.5- /	12.2-22- /	13-25- /	14-27- /	14.8-30- /	16- /- /	17- /- /
1150 x 400	46" x 16"	0.260											
1050 x 450	42" x 18"	0.264	Noise Level	<15	<15	<15	<15	<15	<15	15	16	18	19
1350 x 350	54" x 14"	0.265											
950 x 500	38" x 20"	0.272	Veff. FPM (m/s)	405 (2.0)	439 (2.2)	473 (2.4)	507 (2.5)	540 (2.7)	574 (2.9)	608 (3.0)	642 (3.2)	676 (3.4)	709 (3.5)
1200 x 400	48" x 16"	0.272	△ Pt (pa)	0.2	0.3	0.4	0.6	0.7	1.0	1.4	1.5	2.0	2.3
1400 x 350	56" x 14"	0.276	Th. (m)	8-14- /	8.8-15- /	9.6-17- /	11-19- /	11.9-20- /	12.5-23- /	13.5-25- /	14.2-29- /	15.3- /- /	16.5- /- /
1100 x 450	44" x 18"	0.278	Noise Level	<15	<15	<15	<15	<15	<15	<15	15	16	17

- Tabulated data are subject to the same notes as in page No.GR - 18.

Tabular Selection for Double Deflection Grilles / Registers
Model SAR & SAG (HFB or VFB) DD

TABLE GR-22

SIZE (L) x (H) mm	SIZE (L) x (H) Inch	$A_{eff.}$ m^2	Flow Rate L/S (CFM)	1038 (2200)	1085 (2300)	1133 (2400)	1180 (2500)	1227 (2600)
1200 x 300	48" x 12"	0.203	Veff. FPM (m/s)	983 (4.9)	1027 (5.1)	1072 (5.4)	1117 (5.6)	1161 (5.8)
1050 x 350	42" x 14"	0.204	△ Pt (pa)	6.2	6.9	8.0	9.0	10.5
800 x 450	32" x 18"	0.204						
900 x 400	36" x 16"	0.206	Th. (m)	22.5- / - /	25.5- / - /	30- / - /	—	—
1450 x 250	58" x 10"	0.207						
1250 x 300	50" x 12"	0.211	Noise Level	27	28	29	31	33
750 x 500	30" x 20"	0.213						
1500 x 250	60" x 10"	0.215	Veff. FPM (m/s)	931 (4.7)	973 (4.9)	1016 (5.1)	1058 (5.3)	1100 (5.5)
1100 x 350	44" x 14"	0.215	△ Pt (pa)	5.6	6.2	6.9	8.0	9.0
950 x 400	38" x 16"	0.217	Th. (m)	21- / - /	24- / - /	28- / - /	—	—
850 x 450	34" x 18"	0.217						
1300 x 300	52" x 12"	0.221	Noise Level	25	27	28	30	31
1150 x 350	46" x 14"	0.224						
800 x 500	32" x 20"	0.229	Veff. FPM (m/s)	879 (4.4)	919 (4.6)	959 (4.8)	999 (5.0)	1039 (5.2)
1350 x 300	54" x 12"	0.229	△ Pt (pa)	4.5	5.4	6.0	7.0	7.8
1000 x 400	40" x 16"	0.230	Th. (m)	19.8- / - /	23- / - /	26- / - /	—	—
900 x 450	36" x 18"	0.231						
1200 x 350	48" x 14"	0.235	Noise Level	23	24	26	28	29
1050 x 400	42" x 16"	0.236						
1400 x 300	56" x 12"	0.238	Veff. FPM (m/s)	839 (4.2)	877 (4.4)	916 (4.6)	954 (4.8)	992 (5.0)
950 x 450	38" x 18"	0.243	△ Pt (pa)	3.9	4.5	5.0	6.0	6.5
850 x 500	34" x 20"	0.243	Th. (m)	19- / - /	21- / - /	25- / - /	28- / - /	—
1250 x 350	50" x 14"	0.245						
1450 x 300	58" x 12"	0.246	Noise Level	22	23	25	27	28
1100 x 400	44" x 16"	0.249						
1500 x 300	60" x 12"	0.256	Veff. FPM (m/s)	785 (3.9)	820 (4.1)	856 (4.3)	891 (4.5)	927 (4.6)
1300 x 350	52" x 14"	0.256	△ Pt (pa)	3.4	3.9	4.6	5.3	6.0
1000 x 450	40" x 18"	0.257						
900 x 500	36" x 20"	0.259	Th. (m)	18.5- / - /	20- / - /	23- / - /	27- / - /	—
1150 x 400	46" x 16"	0.260						
1050 x 450	42" x 18"	0.264	Noise Level	21	22	24	26	27
1350 x 350	54" x 14"	0.265						
950 x 500	38" x 20"	0.272	Veff. FPM (m/s)	743 (3.7)	777 (3.9)	811 (4.1)	844 (4.2)	878 (4.4)
1200 x 400	48" x 16"	0.272	△ Pt (pa)	3.0	3.4	3.9	4.5	5.0
1400 x 350	56" x 14"	0.276	Th. (m)	17.8- / - /	19.4- / - /	22.5- / - /	25.5- / - /	30- / - /
1100 x 450	44" x 18"	0.278	Noise Level	19	20	22	24	25

- Tabulated data are subject to the same notes as in page No.GR - 18.

Tabular Selection for Double Deflection Grilles / Registers
Model SAR & SAG (HFB or VFB) DD

TABLE GR-23

SIZE (L) x (H) mm	SIZE (L) x (H) Inch	$A_{eff.}$ m^2	Flow Rate L/S (CFM)	661 (1400)	708 (1500)	755 (1600)	802 (1700)	849 (1800)	897 (1900)	944 (2000)	991 (2100)	1038 (2200)	1085 (2300)
900 x 550	36" x 22"	0.283	Veff. FPM (m/s)	454 (2.3)	486 (2.4)	519 (2.6)	551 (2.8)	584 (2.9)	616 (3.1)	648 (3.2)	681 (3.4)	713 (3.6)	746 (3.7)
1250 x 400	50" x 16"	0.283	△ Pt (pa)	0.4	0.5	0.6	0.8	1.0	1.4	1.5	2.0	2.7	3.0
1450 x 350	58" x 14"	0.286	Th. (m)	9.5-16.5- /	10.4-18- /	11.2-19.3- /	12.2-21- /	13-24- /	14-27- /	14.9-30- /	16- / - /	17.2- / - /	19- / - /
1000 x 500	40" x 20"	0.288	Noise Level	<15	<15	<15	<15	<15	<15	15	17	19	20
1150 x 450	46" x 18"	0.290											
1300 x 400	52" x 16"	0.296	Veff. FPM (m/s)	438 (2.2)	469 (2.3)	500 (2.5)	532 (2.7)	563 (2.8)	594 (3.0)	626 (3.1)	657 (3.3)	688 (3.4)	719 (3.6)
1050 x 500	42" x 20"	0.296	△ Pt (pa)	0.3	0.4	0.5	0.7	0.8	1.0	1.4	1.5	2.3	2.7
1500 x 350	60" x 14"	0.297	Th. (m)	9.3-16- /	10.5-18- /	11-19- /	12-20.5- /	12.8-23.5- /	13.8-26- /	14.8-30- /	15.8- / - /	17- / - /	18.5- / - /
950 x 550	38" x 22"	0.298	Noise Level	<15	<15	<15	<15	<15	<15	<15	16	18	19
1200 x 450	48" x 18"	0.305	Veff. FPM (m/s)	414 (2.1)	443 (2.2)	473 (2.4)	502 (2.5)	532 (2.7)	561 (2.8)	591 (3.0)	620 (3.1)	650 (3.2)	679 (3.4)
1350 x 400	54" x 16"	0.307	△ Pt (pa)	0.2	0.3	0.4	0.6	0.7	0.8	1.0	1.4	1.5	2.3
1100 x 500	44" x 20"	0.312											
1000 x 550	40" x 22"	0.315	Th. (m)	9.2-14.8- /	10.2-17.5- /	10.8-18.8- /	11.8-20- /	12.7-23- /	13.5-25.5- /	14.2-28- /	15.2- / - /	16.8- / - /	18- / - /
1250 x 450	50" x 18"	0.317											
1400 x 400	56" x 16"	0.319	Noise Level	<15	<15	<15	<15	<15	<15	<15	<15	16	18
1050 x 550	42" x 22"	0.324											
1150 x 500	46" x 20"	0.326	Veff. FPM (m/s)	389 (1.9)	417 (2.1)	444 (2.2)	472 (2.4)	500 (2.5)	528 (2.6)	555 (2.8)	583 (2.9)	611 (3.1)	639 (3.2)
1450 x 400	58" x 16"	0.330	△ Pt (pa)	0.1	0.2	0.3	0.4	0.5	0.6	0.8	1.0	1.4	2.0
1300 x 450	52" x 18"	0.331	Th. (m)	9-15- /	9.7-17- /	10.5-18- /	11.3-19.3- /	12.2-21.5- /	13-24- /	14-27- /	14.8-30- /	16- / - /	17.5- / - /
1200 x 500	48" x 20"	0.341											
1500 x 400	60" x 16"	0.343	Noise Level	<15	<15	<15	<15	<15	<15	<15	<15	15	17
1350 x 450	54" x 18"	0.343											
1250 x 500	50" x 20"	0.355	Veff. FPM (m/s)	357 (1.8)	382 (1.9)	408 (2.0)	433 (2.2)	459 (2.3)	484 (2.4)	510 (2.5)	535 (2.7)	561 (2.8)	586 (2.9)
1150 x 550	46" x 22"	0.356	△ Pt (pa)	0.05	0.1	0.2	0.3	0.35	0.4	0.5	0.6	0.7	1.4
1400 x 450	56" x 18"	0.357	Th. (m)	8.5-14.5- /	9.3-16- /	10-17.5- /	10.5-18.5- /	11.5-20- /	12.5-22- /	13.3-25- /	14-27- /	15.3- / - /	17- / - /
1450 x 450	58" x 18"	0.370											
1300 x 500	52" x 20"	0.371	Noise Level	<15	<15	<15	<15	<15	<15	<15	<15	<15	<15
1200 x 550	48" x 22"	0.374											

- Tabulated data are subject to the same notes as in page No.GR - 18.

Tabular Selection for Double Deflection Grilles / Registers
Model SAR & SAG (HFB or VFB) DD

TABLE GR-24

SIZE (L) x (H) mm	SIZE (L) x (H) Inch	A eff. m²	Flow Rate L/S (CFM)	1133 (2400)	1180 (2500)	1227 (2600)	1274 (2700)	1320 (2800)
900 x 550	36" x 22"	0.283	Veff. FPM (m/s)	778 (3.9)	811 (4.1)	843 (4.2)	875 (4.4)	908 (4.5)
1250 x 400	50" x 16"	0.283	△ Pt (pa)	3.6	4.2	4.5	5.3	6.2
1450 x 350	58" x 14"	0.286	Th. (m)	21- / - /	25- / - /	28- / - /	—	—
1000 x 500	40" x 20"	0.288	Noise Level	22	23	25	27	28
1150 x 450	46" x 18"	0.290						
1300 x 400	52" x 16"	0.296	Veff. FPM (m/s)	751 (3.8)	782 (3.9)	813 (4.1)	844 (4.2)	876 (4.4)
1050 x 500	42" x 20"	0.296	△ Pt (pa)	3.2	3.9	4.3	5.0	5.6
1500 x 350	60" x 14"	0.297	Th. (m)	19- / - /	23- / - /	26.5- / - /	27- / - /	—
950 x 550	38" x 22"	0.298	Noise Level	21	22	24	26	27
1200 x 450	48" x 18"	0.305	Veff. FPM (m/s)	709 (3.5)	738 (3.7)	768 (3.8)	797 (4.0)	827 (4.1)
1350 x 400	54" x 16"	0.307	△ Pt (pa)	3.0	3.4	3.8	4.5	5.2
1100 x 500	44" x 20"	0.312						
1000 x 550	40" x 22"	0.315	Th. (m)	20- / - /	22- / - /	26- / - /	30- / - /	—
1250 x 450	50" x 18"	0.317						
1400 x 400	56" x 16"	0.319	Noise Level	20	21	23	25	26
1050 x 550	42" x 22"	0.324						
1150 x 500	46" x 20"	0.326	Veff. FPM (m/s)	667 (3.3)	694 (3.5)	722 (3.6)	750 (3.7)	778 (3.9)
1450 x 400	58" x 16"	0.330	△ Pt (pa)	2.3	3.0	3.4	3.9	4.5
1300 x 450	52" x 18"	0.331	Th. (m)	19.2- / - /	22.5- / - /	25- / - /	29- / - /	—
1200 x 500	48" x 20"	0.341						
1500 x 400	60" x 16"	0.343	Noise Level	18	20	22	23	25
1350 x 450	54" x 18"	0.343						
1250 x 500	50" x 20"	0.355	Veff. FPM (m/s)	612 (3.1)	637 (3.2)	663 (3.3)	688 (3.4)	714 (3.6)
1150 x 550	46" x 22"	0.356	△ Pt (pa)	1.5	2.3	2.7	3.2	3.6
1400 x 450	56" x 18"	0.357	Th. (m)	18- / - /	19.8- / - /	23- / - /	26- / - /	30- / - /
1450 x 450	58" x 18"	0.370						
1300 x 500	52" x 20"	0.371	Noise Level	16	18	19	21	22
1200 x 550	48" x 22"	0.374						

- Tabulated data are subject to the same notes as in page No.GR - 18.

Ordering Data

- **Available Surface Finishes For Grilles and Registers :**
  - Natural / Matt Silver Anodized .
  - Powder Coating (Standard Colors are white RAL 9010 / 9016, other optional colors if required to be provided in RAL - No. only and charged extra).
  - Aluminium in Mill Finish.
  - Other Special Finishes (on request if available).

- **Available Surface Finishes For Opposed Blade Dampers :**
  - Aluminium in Mill Finish (standard).
  - Matt Black Powder Coating (optional).

- **Ordering Specifications :**

Specify :

1 . Grille / Register Description (Supply, Return, Extract, Exhaust, Fresh Air , ... etc.).
2 . Blades Mounting (Not required for Fresh Air and Eggcrate Grilles / Registers).
3 . Single / Double Deflection (Not required for Fresh Air and Eggcrate Grilles / Registers).
4 . Opposed Blade Damper to be mentioned only :-
  - If required in black color.
  - Or, in case it's attached with Fresh Air or Eggcrate Grilles.
5 . Nominal / Neck size.
6 . Quantity.
7 . Grille / Register Surface Finish.
8 . RAL - No.(only mention if powder coating surface finish is required).
9 . Type of Fixing (Concealed or Face Screw Fixing).
10 . Optional Accessories or Remarks (Aluminium Washable Filter, Gasket, ... or others).

Example 1 :

1	2	3	4	5	6	7	8	9	10
SAR	HFB	DD	BD	20" x 8" 500 x 200 (mm)	150	Powder Coating	9016	Concealed	With Rubber Gasket

Example 2 :

1	2	3	4	5	6	7	8	9	10
FAG + D c/w FILTER	–	–	D	12" x 6" 300 x 150 (mm)	23	Silver Anodized	–	Concealed	(Double Frame) Fixed Blades < 45°

Example 3 :

1	2	3	4	5	6	7	8	9	10
ECG + F	–	–	–	12" x 8" 300 x 200 (mm)	10	Powder Coating	1015 (Optional)	Screw	With Filter

BEST CHOICE INDUSTRIES L.L.C.

MANUFACTURING CENTRAL AIR CONDITIONING AIR OUTLETS

Tel. : 04 - 88 55 422, Fax : 04 - 88 55 421, P.O. Box: 31567, Dubai - U. A. E. - E-mail: bcillc@emirates.net.ae

CHAPTER 3

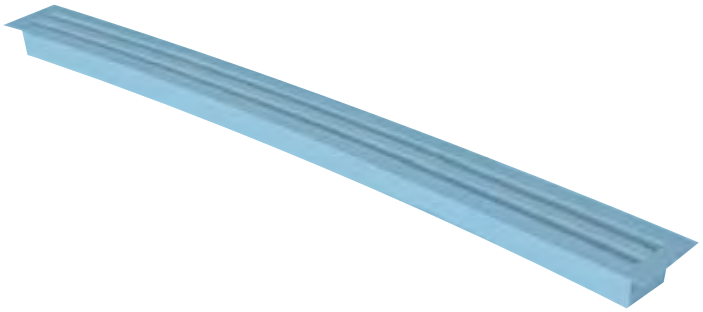

LINEAR SLOT DIFFUSERS

CHAPTER-3

LINEAR SLOT DIFFUSERS

LINEAR SLOT DIFFUSERS

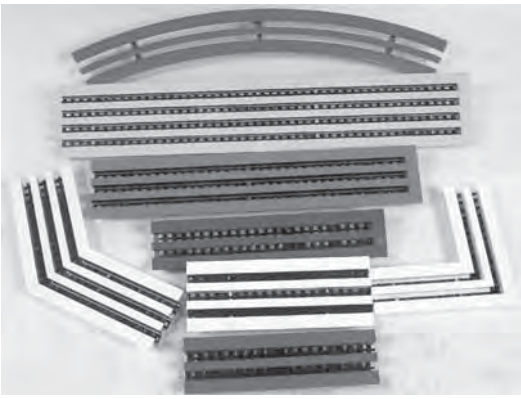

BCI Linear Slot Diffusers have been designed to satisfy architectural concepts that require continuous length applications without compromising air distribution performance. A combination of engineering excellence and architectural appeal in a single product is provided in this type of units.
Linear Slot Diffusers for supply air applications are usually installed in ceilings or high side wall locations, the design of these units features an adjustable supply air pattern and makes them particularly suitable for open office perimeter zones, main floor entrance foyers and lobbies, elevator lobbies, conference rooms, mall atriums and theatres.

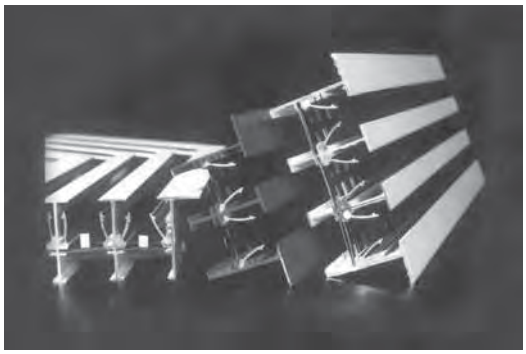

Features & Characteristics :

- Construction : Frame, Core & Deflection Blades are made of high quality Extruded Aluminium Profiles of 6063 Alloy.
- Hit - and - Miss Damper Material : made of Prepainted Aluminium coils of 3005 Alloy in matt black color finish.
- Frame Flange Width : 28 mm .
- Available in 1 to 8 Numbers of Slots.
- Available in three different slot widths (openings) :
  - 20 mm (3/4 ") as standard.
  - 16 and 25 mm (5/8 " and 1") as option.
- The design of linear slot diffusers provides a full flexibility in volume and air pattern control.
- The Volume Control Damper (Hit - and - Miss Damper) installed in the rear part of the linear slot diffuser consists of two Aluminium strips, the rear one is fixed and the other one is sliding.
- Both the Hit and Miss strips are having 10 x 10 mm square holes. Adjacent holes are spaced in 10 mm distances also.

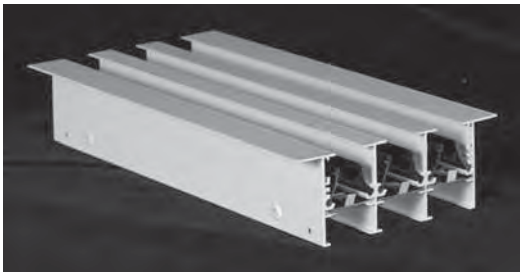

- Manually and from the slot face opening, the air flow rate can be adjusted by moving the sliding part of the Hit - and - Miss damper left or right.
- The Volume Control Damper (Hit - and - Miss Damper) is designed in a unique way that it can be used as an equalizing grid.
- Air pattern can be directed vertically or horizontally by means of Deflection Blades in fully 180 ° range without changing the air flow rate. These blades can be manually adjusted from slot face opening.
- The Adjustable Deflection Blades allow for the air pattern to be directed along the ceiling , straight down or at some intermediate setting.
- To maintain perfect and unbroken appearance for continuous runs, alignment joining strips are provided in proper lengths and quantities with no extra cost.
- Also, End Cap pieces to be provided in proper sizes as requested with no extra cost.
- Mounting Instructions : see page No. LD - 06.
- Surface Finishes : see page No. LD - 17.

TABLE LD - 01

OPERATING RANGE AND QUICK SELECTION TABLE FOR LINEAR SLOT DIFFUSERS								
SLOT OPENING = 16 mm			SLOT OPENING = 20 mm (Standard)			SLOT OPENING = 25 mm		
No. of Slots	CFM Range		No. of Slots	CFM Range		No. of Slots	CFM Range	
1	50	74	1	70	95	1	85	127
2	95	136	2	119	170	2	155	229
3	125	191	3	165	248	3	252	318
4	163	254	4	212	316	4	265	413
5	201	290	5	259	371	5	345	519
6	248	339	6	314	424	6	403	583
7	271	381	7	350	519	7	473	678
8	297	424	8	386	562	8	530	742

- CFM Values are based on :
  - Length of one metre.
  - Noise Level ranging from 15-25 (dB).
  - Vertical Discharge without wall effect.

TABLE LD - 02

NO. OF SECTIONS PER RUNNING UNIT			
No. of Slots	ONE SECTION	TWO SECTIONS	MULTI SECTIONS
1	≤ 4.0	> 4.0	> 6.0
2	≤ 4.0	> 4.0	> 6.0
3	≤ 4.0	> 4.0	> 6.0
4	≤ 4.0	> 4.0	> 6.0
5	≤ 3.5	> 3.5	> 6.0
6	≤ 3.5	> 3.5	> 6.0
7	≤ 3.5	> 3.5	> 6.0
8	≤ 3.5	> 3.5	> 6.0

- Above arrangements are approximate and subject to change according to order / site conditions.

End Cap / Flange Arrangements

Open Ends

End Cap at One Side

End Cap at Both Sides

End Cap at Both Terminal Sides (Multi Sections)

MITERED CORNERS

TABLE LD - 03

Ceiling Mounted Corners		Wall Mounted Corners	
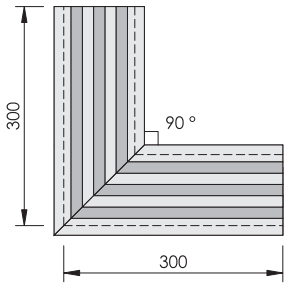	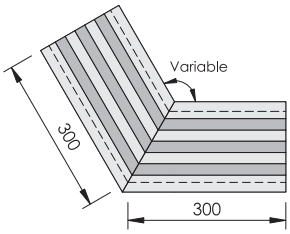	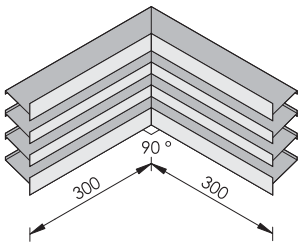	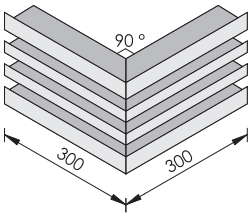
90 ° Corner Standard	**Variable Angle Corner Optional**	**Inside 90 ° Corner Optional**	**Outside 90 ° Corner Optional**

- Corners are always supplied in 300 mm adjacent sides as standard unless otherwise specified or required.

Linear Slot Diffusers In Curved Shape

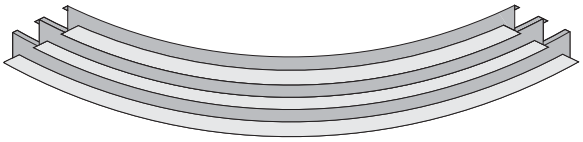

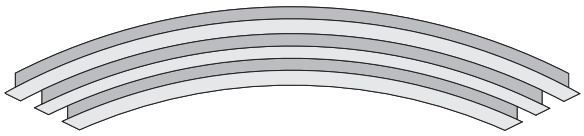

- Curves can be fabricated in minimum curvature radius = 1 mtr.
- Curve applications are not possible for side wall installements.

Single and Multiple Slot Pattern Adjustment

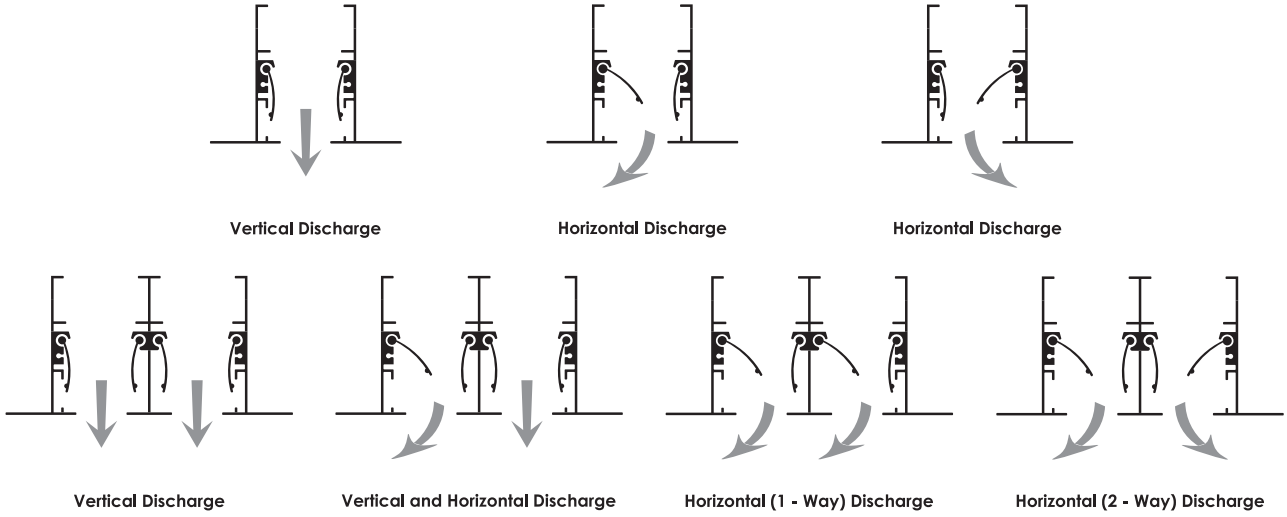

- Two deflectors per slot provide an adjustable air pattern of fully 180°.

Construction and Dimensional Details

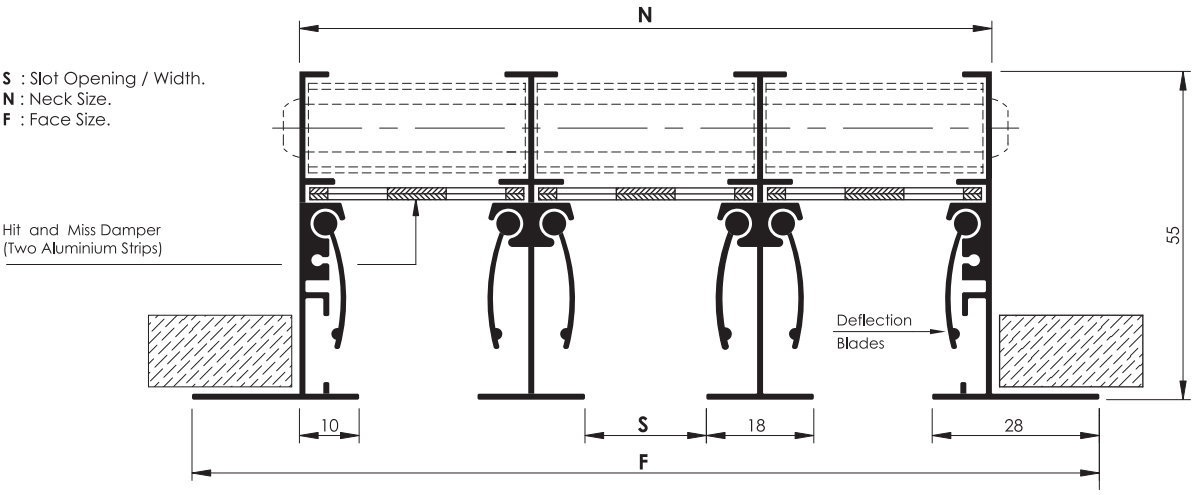

TABLE LD - 04

NECK & OVERALL DIMENSIONS FOR LINEAR SLOT DIFFUSERS

No. of Slots	S = 16 mm		S = 20 mm (Standard)		S = 25 mm	
	N	F	N	F	N	F
1	36	72	40	76	46	82
2	70	106	78	114	90	126
3	104	140	116	152	134	170
4	138	174	154	188	178	214
5	172	208	192	228	222	258
6	206	242	230	266	266	302
7	240	276	268	30 4	310	346
8	274	310	306	342	354	390

- All dimensions are in mm and subject to ± 1 mm tolerance.

Available Models
Construction and Dimensional Details

Model SLD

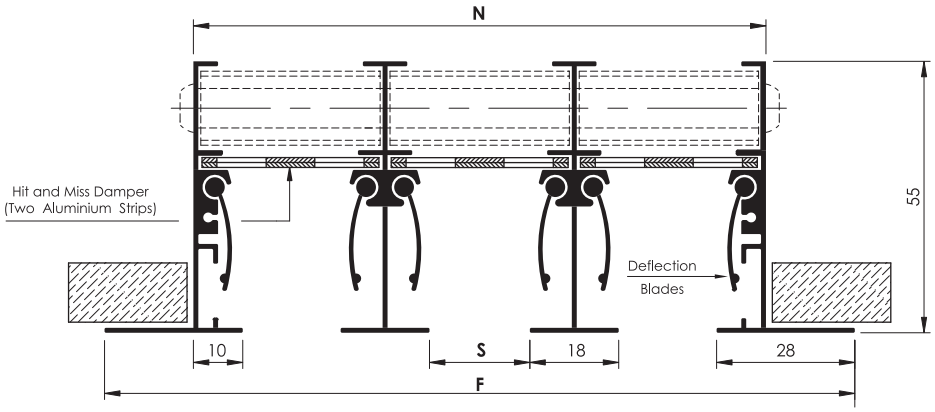

- **SLD** : is Supply Air Linear Slot Diffuser c/w Deflection Blades & Hit and Miss Damper.

Model RLD

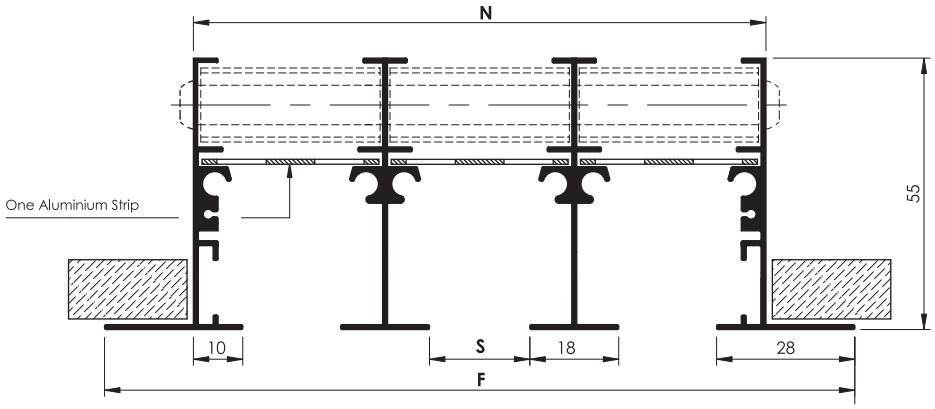

- **RLD** : is Return / Extract Air Linear Slot Diffuser w/o Deflection Blades & Hit and Miss Damper.

Model DLD

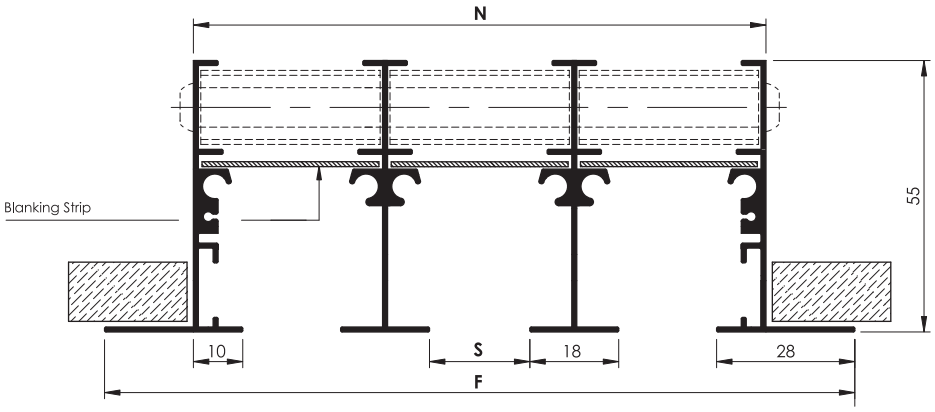

- **DLD** : is Dummy (Non Active) Linear Slot Diffuser supplied with blanking strip replacing the Hit and Miss Damper.

S : Slot Opening / Width.
N : Neck Size.
F : Face Size.

- All dimensions are in mm and subject to ± 1 mm tolerance.

Mounting Instructions

With Plenum Box (provided by others) :

Fix the plenum to the ceiling. The plenum has a border in the lower part by which the upper part of the diffuser can be inserted into it. Your diffuser is provided with ceiling mounting fixing U - Channels. These channels are inserted into the keyway and should be slid into the final position corresponding to the opposite fixing point previously prepared on the U - Bracket as shown(plenums usually supplied with these brackets). The two elements (diffuser and plenum) can be attached together using self tapping screws and screw driver. The diffuser should be made level using a water level and by adjusting the screws positions (left, right, up and down)as shown.

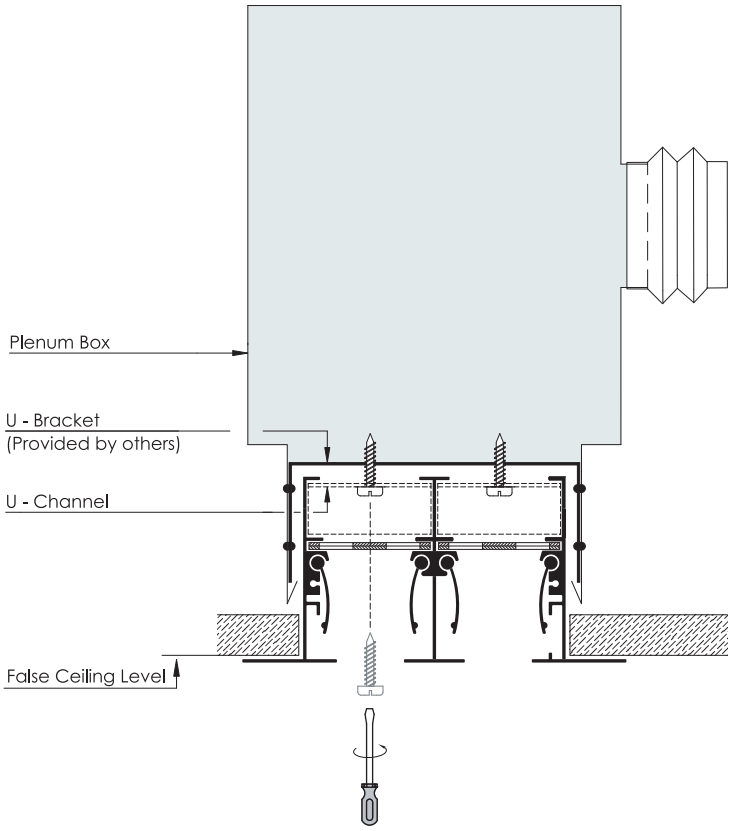

Without Plenum Box :

In this case the diffuser can be attached to U - Shape bracket (provided by others) and rest directly on the ceiling as shown.

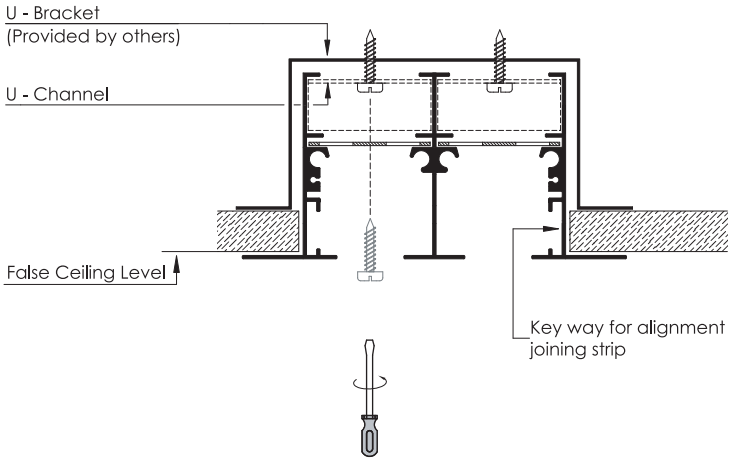

Diffusers in Continuous Running :

Normal installations as described above but, besides apply the provided joining key strips between the diffuser adjoining sections. After insertion and alignment of the joined sections set diffusers in the final position.

Engineering and Performance Data

Vertical Discharge | **Slot Opening / Width = 16 mm**

Correction table for other Lengths :

Length (m)	Noise Level	Throw (m)
1.0	0	x 1.00
1.5	+ 2	x 1.05
2.0	+ 3	x 1.10
2.5	+ 4	
3.0	+ 5	
4.0	+ 6	
5.0	+ 7	
6.0	+ 8	x 1.15
8.0	+ 9	
10.0	+ 10	

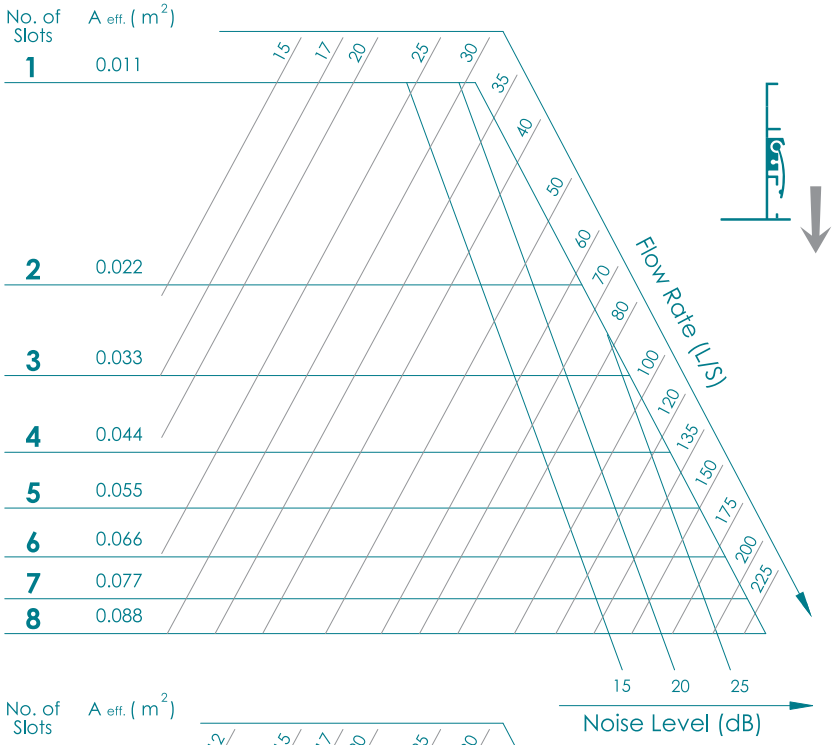

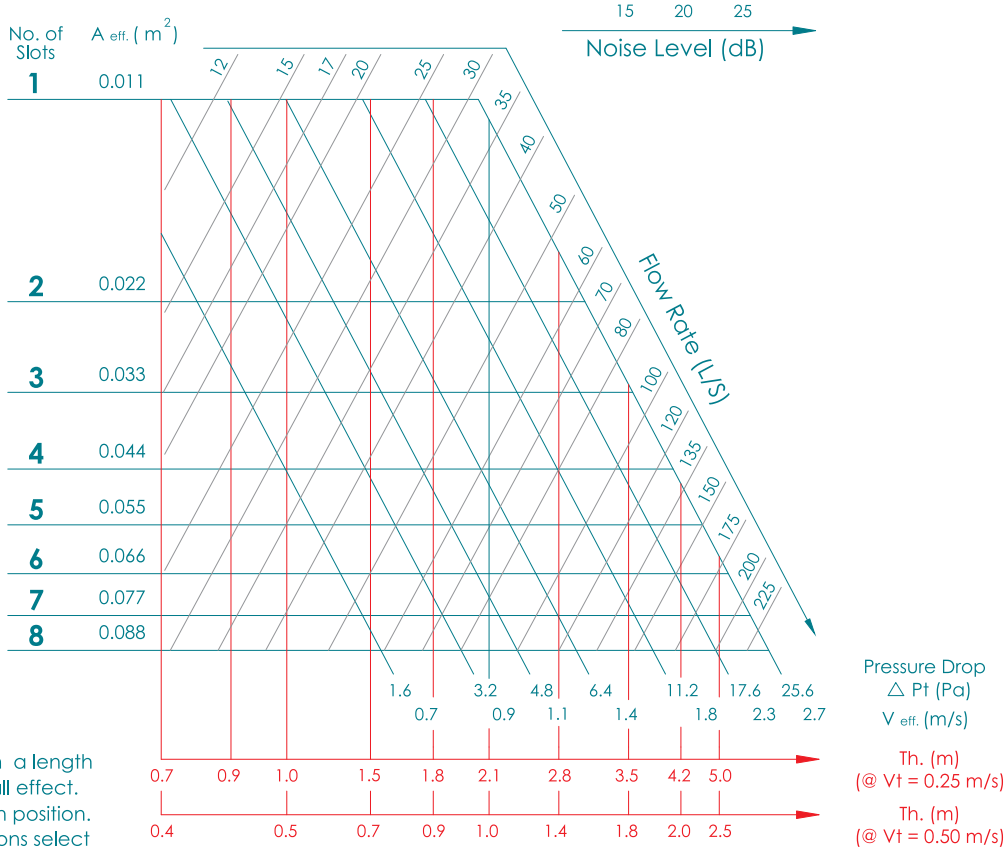

Correction table for Return/Extract applications :

V eff. (m/s)	x 0.45
△ Pt (Pa)	x 0.65
NC	- 10

- Performances are based on a length of one metre and with no wall effect.
- Hit - Miss Damper at full open position.
- For Return / Extract applications select performance data using above charts and correction table after ignoring throw values.
- Noise Level values are based on 10 dB room attenuation.

Engineering and Performance Data

Vertical Discharge

Slot Opening / Width = 20 mm (Standard)

Correction table for other Lengths :

Length (m)	Noise Level	Throw (m)
1.0	0	x 1.00
1.5	+ 2	x 1.05
2.0	+ 3	x 1.10
2.5	+ 4	
3.0	+ 5	
4.0	+ 6	
5.0	+ 7	
6.0	+ 8	x 1.15
8.0	+ 9	
10.0	+ 10	

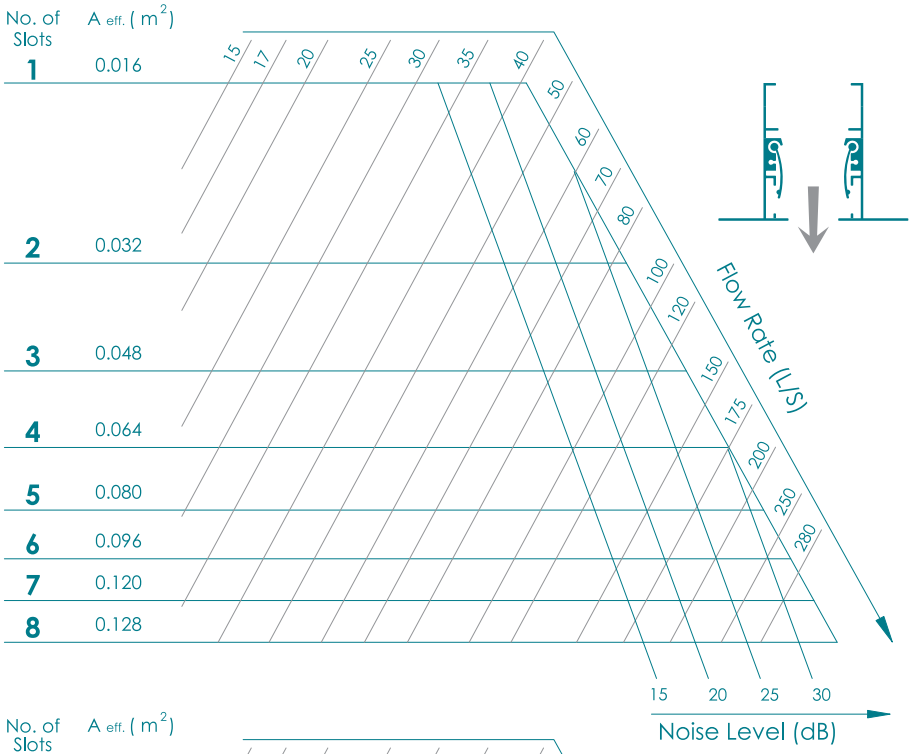

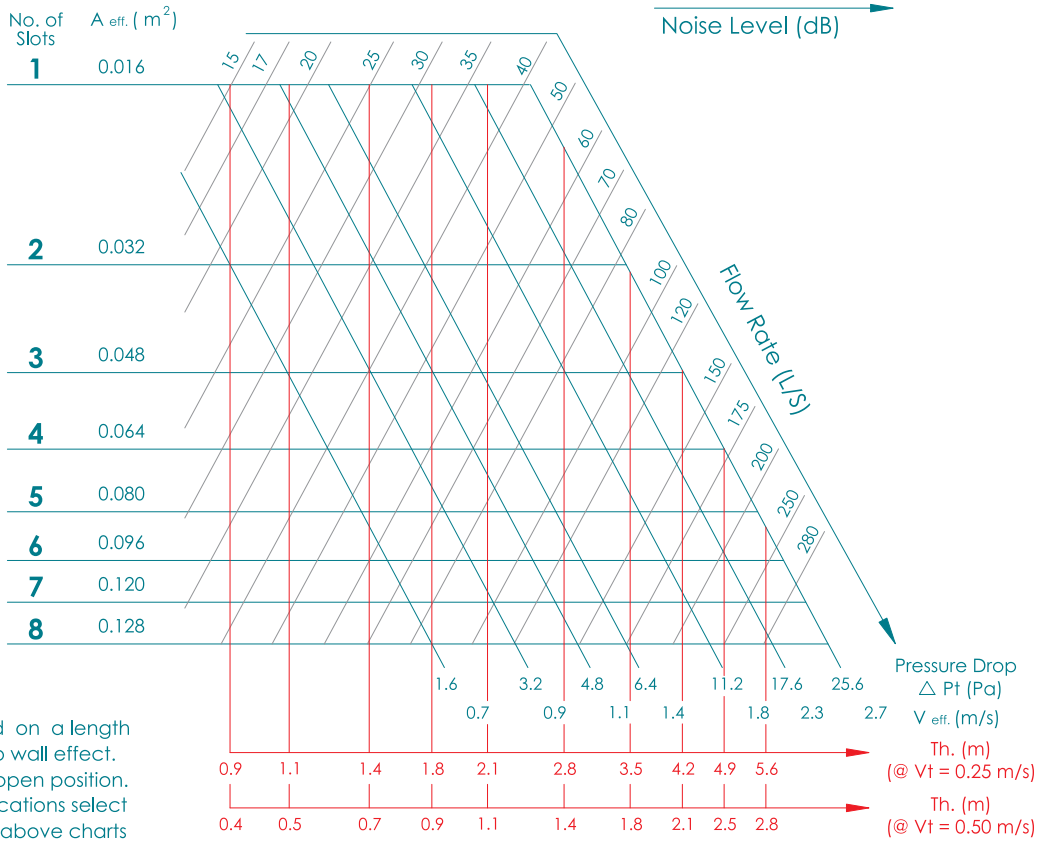

Correction table for Return/Extract applications :

V eff. (m/s)	x 0.45
△ Pt (Pa)	x 0.65
NC	- 10

- Performances are based on a length of one metre and with no wall effect.
- Hit - Miss Damper at full open position.
- For Return / Extract applications select performance data using above charts and correction table after ignoring throw values.
- Noise Level values are based on 10 dB room attenuation.

Engineering and Performance Data

Vertical Discharge

Slot Opening / Width = 25 mm

Correction table for other Lengths :

Length (m)	Noise Level	Throw (m)
1.0	0	x 1.00
1.5	+ 2	x 1.05
2.0	+ 3	x 1.10
2.5	+ 4	
3.0	+ 5	
4.0	+ 6	
5.0	+ 7	
6.0	+ 8	x 1.15
8.0	+ 9	
10.0	+ 10	

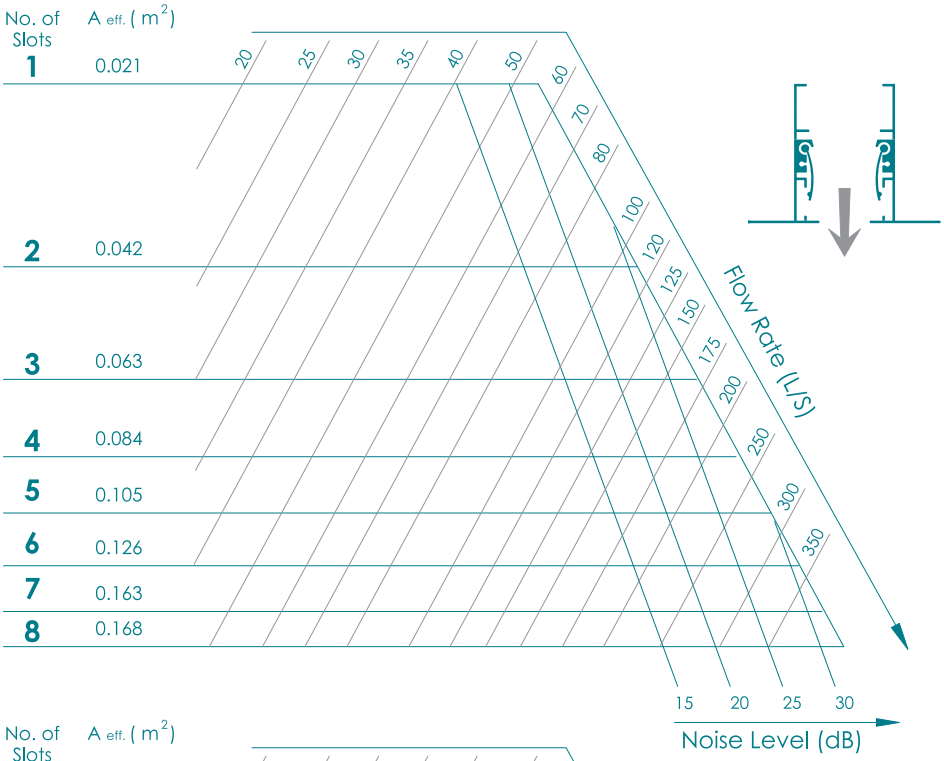

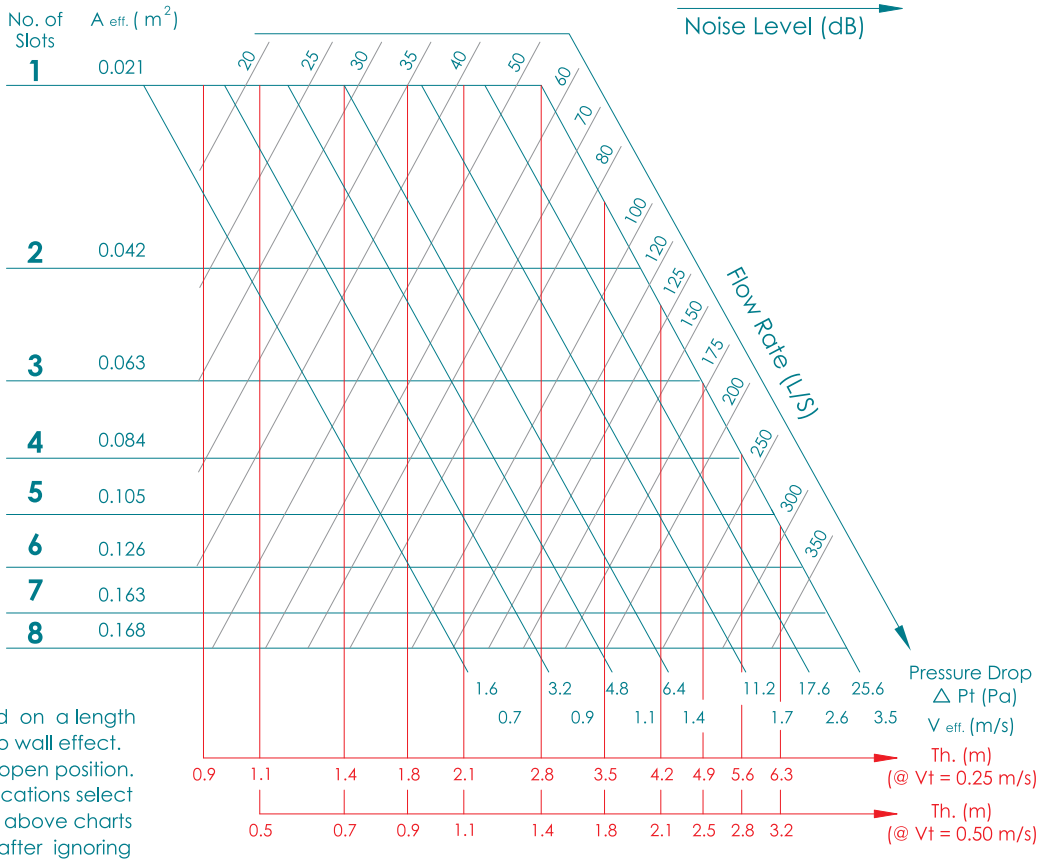

Correction table for Return/Extract applications :

V eff. (m/s)	x 0.45
△ Pt (Pa)	x 0.65
NC	- 10

- Performances are based on a length of one metre and with no wall effect.
- Hit - Miss Damper at full open position.
- For Return / Extract applications select performance data using above charts and correction table after ignoring throw values.
- Noise Level values are based on 10 dB room attenuation.

Engineering and Performance Data

Horizontal Discharge

Slot Opening / Width = 16 mm

Correction table for other Lengths :

Length (m)	Noise Level	Throw (m)
1.0	0	x 1.00
1.5	+ 2	x 1.05
2.0	+ 3	x 1.10
2.5	+ 4	
3.0	+ 5	
4.0	+ 6	
5.0	+ 7	
6.0	+ 8	x 1.15
8.0	+ 9	
10.0	+ 10	

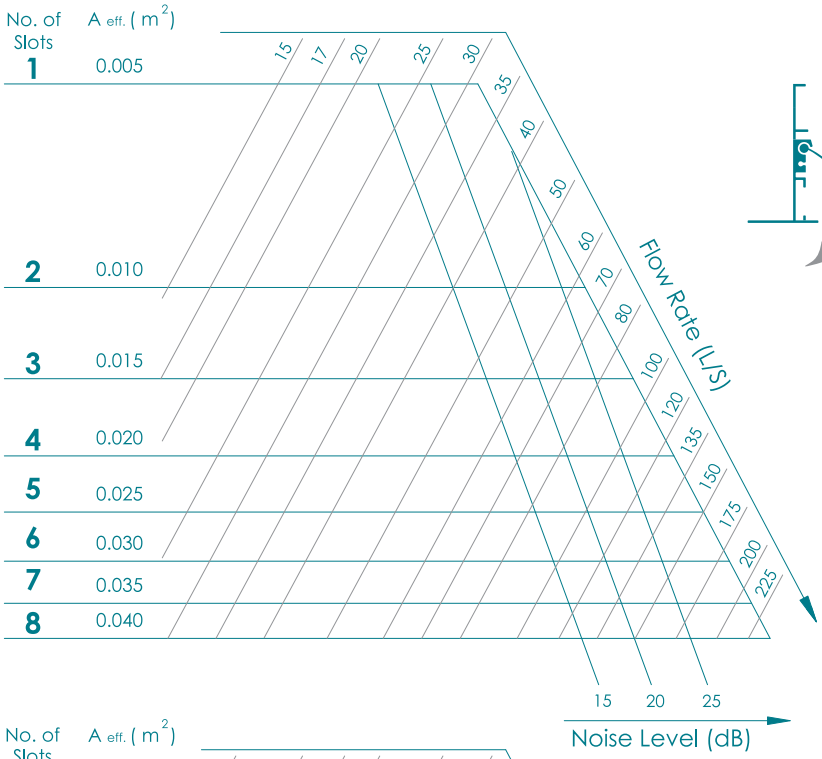

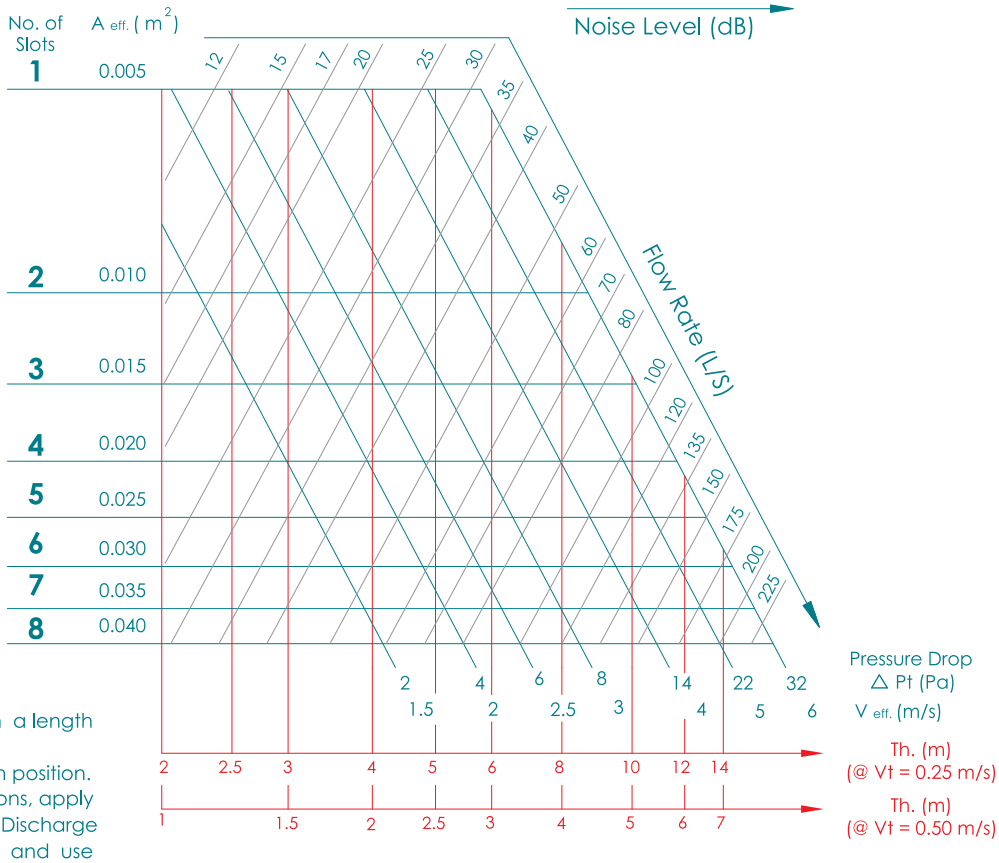

- Performances are based on a length of one metre.
- Hit - Miss Damper at full open position.
- For Return / Extract applications, apply the same data on Vertical Discharge charts (page No. LD - 07) and use correction table.
- Noise Level values are based on 10 dB room attenuation.

Engineering and Performance Data

Horizontal Discharge

Slot Opening / Width = 20 mm (Standard)

Correction table for other Lengths :

Length (m)	Noise Level	Throw (m)
1.0	0	x 1.00
1.5	+ 2	x 1.05
2.0	+ 3	x 1.10
2.5	+ 4	
3.0	+ 5	
4.0	+ 6	
5.0	+ 7	
6.0	+ 8	x 1.15
8.0	+ 9	
10.0	+ 10	

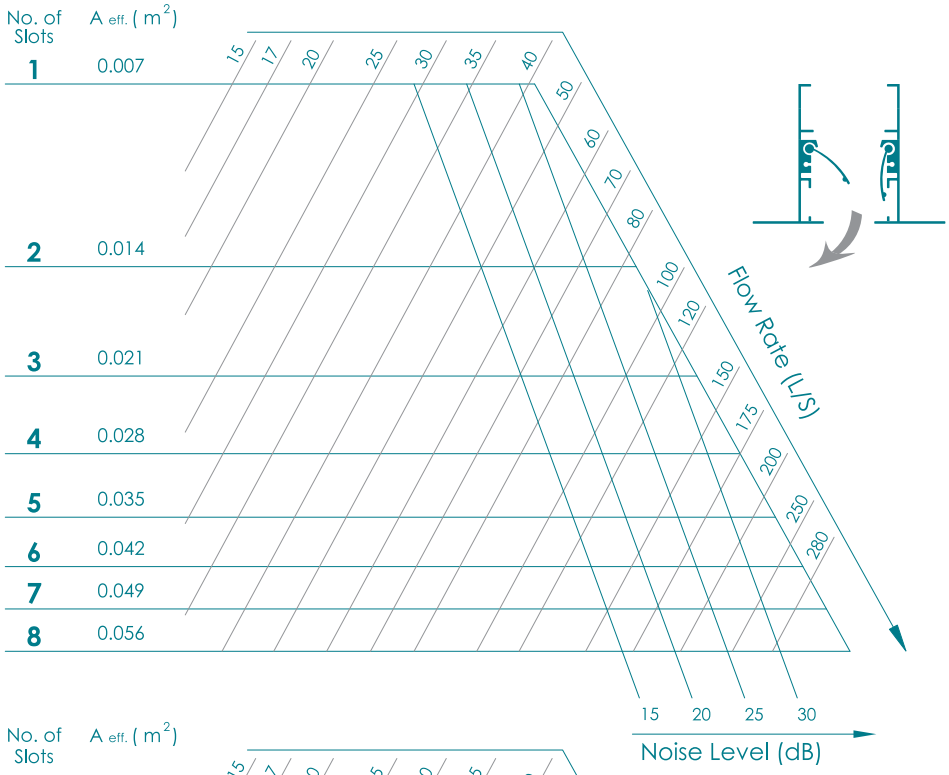

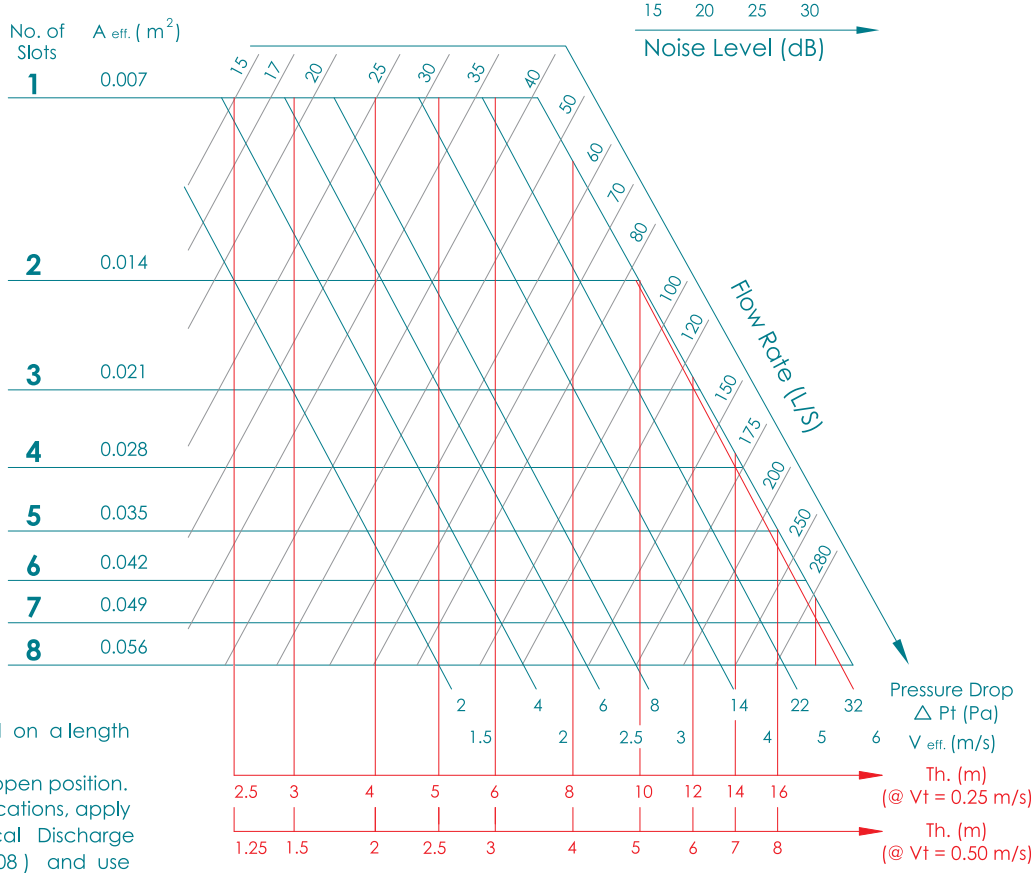

- Performances are based on a length of one metre.
- Hit - Miss Damper at full open position.
- For Return / Extract applications, apply the same data on Vertical Discharge charts (page No. LD - 08) and use correction table.
- Noise Level values are based on 10 dB room attenuation.

Engineering and Performance Data

Horizontal Discharge

Slot Opening / Width = 25 mm

Correction table for other Lengths :

Length (m)	Noise Level	Throw (m)
1.0	0	x 1.00
1.5	+ 2	x 1.05
2.0	+ 3	x 1.10
2.5	+ 4	
3.0	+ 5	
4.0	+ 6	
5.0	+ 7	
6.0	+ 8	x 1.15
8.0	+ 9	
10.0	+ 10	

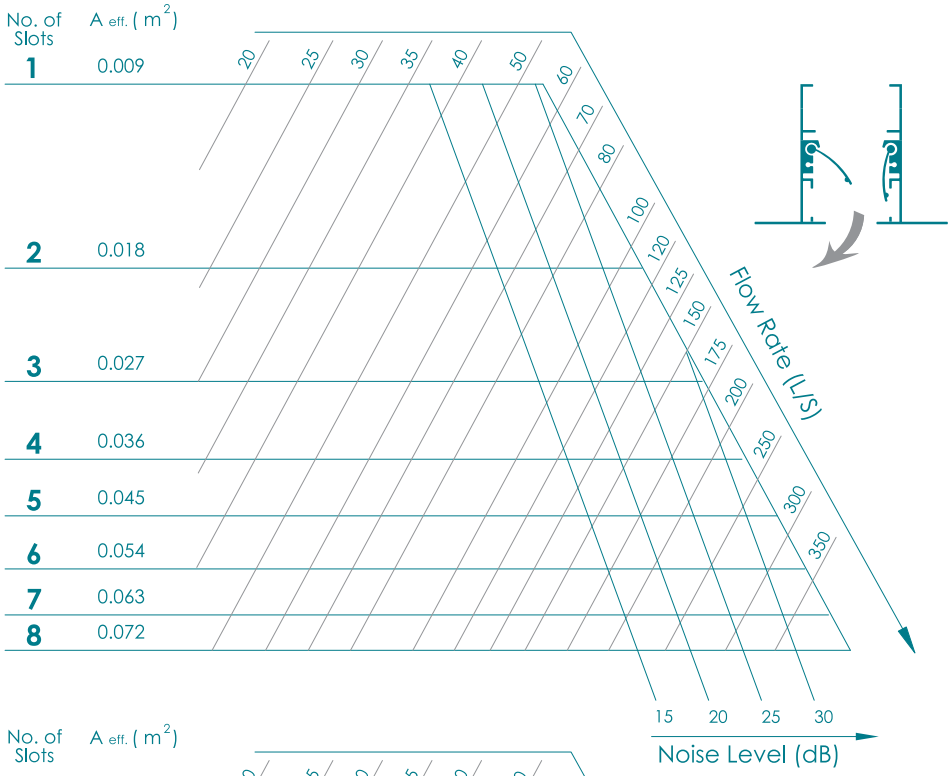

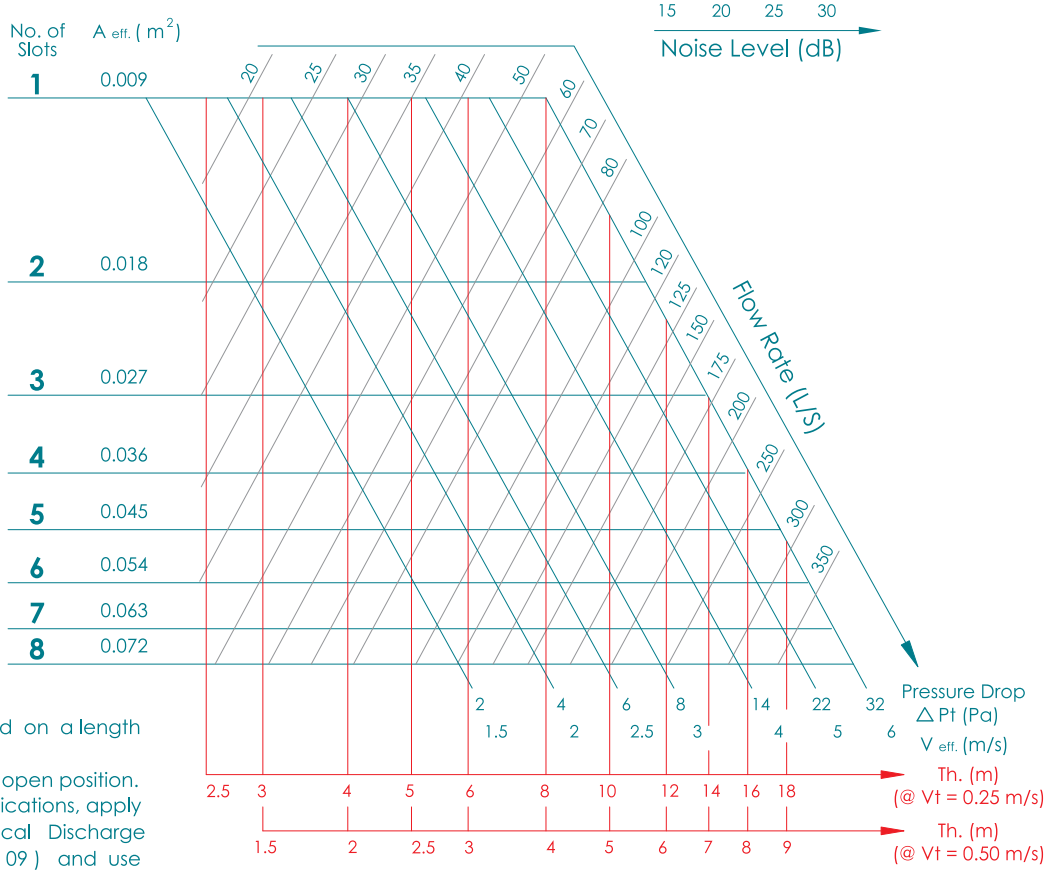

- Performances are based on a length of one metre.
- Hit - Miss Damper at full open position.
- For Return / Extract applications, apply the same data on Vertical Discharge charts (page No. LD - 09) and use correction table.
- Noise Level values are based on 10 dB room attenuation.

Engineering and Performance Data

Throw and Wall Effect for Vertical Discharge

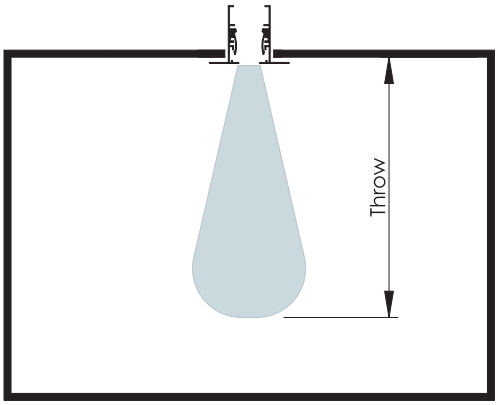

Vertical Discharge without wall effect

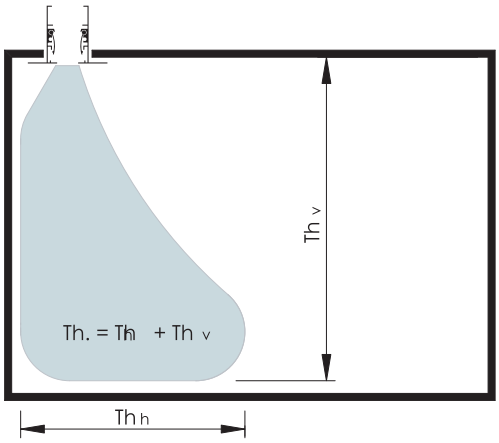

Vertical Discharge with wall effect

Note : In case of wall effect, all performance data will remain the same except that throw values to be multiplied by **1.43**

Linear Slot Diffusers Selection Procedure

I . Vertical Discharge (without wall effect) : (Illustrative Example)

Given Data :
No. of Slots = 3
Slot Opening / Width = 20 mm (Standard).
Length = 2.5 m.
Air Flow Rate = 530 CFM = 250 (L/S).
Per one metre length 250 (L/S) / 2.5 m = 100 (L/S)/m.
Refer to page No. LD - 08 for Vertical Discharge and 20 mm slot opening and find out that :
$A_{eff.}$ = 0.048 m^2 .
Noise Level = 22 + 4 = 26 dB (value as read from the chart and corrected by the correction table for other lengths @ 2.5 m).
$V_{eff.}$ = 2.2 m/s.
ΔPt = 16.8 Pa.
Th. @ V_t = 0.25 m/s = 3.4 x 1.1 = 3.7 m (value as read from the chart and corrected by the correction table for other lengths @ 2.5 m).
Ditto, but @ 0.5 m/s = 1.7 x 1.1 = 1.9 m.
In case of wall effect as shown above, only correct the throw values to be :
Th. @ V_t = 0.25 m/s = 3.7 x 1.43 = 5.3 m.
Ditto, but @ 0.5 m/s = 1.9 x 1.43 = 2.7 m.

For Return / Extract data (if required) ignore throw values and read others as followings :-
Noise Level = 26 - 10 = 16 dB (see correction table).
$V_{eff.}$ = 2.2 x 0.45 = 1.0 m/s (see correction table).
ΔPt = 16.8 x 0.65 = 10.9 Pa (see correction table).

II . Horizontal Discharge : (Illustrative Example)

Given Data :
No. of Slots = 4
Slot Opening / Width = 25 mm.
Length = 5.0 m.
Air Flow Rate = 1430 CFM = 675 (L/S).
Per one metre length 675 (L/S) / 5.0 m = 135 (L/S)/m.
Refer to page No. LD - 12 for Horizontal Discharge and 25 mm slot opening and find out that :
$A_{eff.}$ = 0.036 m^2 .
Noise Level = 19 + 7 = 26 dB (value as read from the chart and corrected by the correction table for other lengths @ 5 m).
$V_{eff.}$ = 3.8 m/s.
ΔPt = 12.5 Pa.
Th. @ V_t = 0.25 m/s = 10 x 1.1 = 11 m (value as read from the chart and corrected by the correction table for other lengths @ 5.0 m).
Ditto, but @ 0.5 m/s = 5 x 1.1 = 5.5 m.
For Return / Extract data (if required) ignore throw values and read others after applying the same given data again but on Vertical Discharge charts (page No. LD - 09) as followings :-
Noise Level = 17 - 10 = 7 < 15 dB (see correction table).
$V_{eff.}$ = 5.6 x 0.45 = 2.5 m/s (see correction table).
ΔPt = 10 x 0.65 = 6.5 Pa (see correction table).

Engineering and Performance Data

Performances at Selected Values of Air Flow Rate (S = 16 mm)

TABLE LD - 05

No. of Slots	Flow Rate (L/S)	Vertical Discharge						Horizontal Discharge				
		$A_{eff.}$ (m^2)	ΔP_t (Pa)	$V_{eff.}$ (m/s)	Noise Level	Th. (m) w/o Wall Effect	Th. (m) with Wall Effect	$A_{eff.}$ (m^2)	ΔP_t (Pa)	$V_{eff.}$ (m/s)	Noise Level	Th. (m)
1	15	0.011	6.4	1.4	< 15	0.5 - 1.0	0.7 - 1.5	0.005	8.0	3.0	< 15	1.5 - 2.9
	20		11.2	1.8	< 15	0.7 - 1.3	1.0 - 1.9		14.0	4.0	< 15	1.9 - 3.8
	25		17.6	2.3	16	0.8 - 1.7	1.2 - 2.4		21.0	5.0	19	2.4 - 4.8
	27		22.4	2.4	18	0.9 - 1.8	1.3 - 2.6		28.0	5.3	21	2.6 - 5.2
	30		24.0	2.6	21	1.0 - 2.0	1.4 - 2.8		30.0	5.8	24	2.8 - 5.6
	35		30.4	2.9	25	1.2 - 2.4	1.7 - 3.4		38.0	6.5	28	3.4 - 6.8
	40		33.6	3.5	29	1.4 - 2.8	2.0 - 4.0		42.0	7.0	32	4.0 - 8.0
2	30	0.022	5.6	1.2	< 15	0.7 - 1.3	1.0 - 1.9	0.010	7.0	2.7	< 15	1.9 - 3.8
	35		7.2	1.5	< 15	0.8 - 1.6	1.1 - 2.3		9.0	3.3	< 15	2.3 - 4.5
	40		10.4	1.8	< 15	0.9 - 1.9	1.4 - 2.7		13.0	3.9	15	2.7 - 5.4
	45		14.4	1.9	15	1.1 - 2.1	1.5 - 3.0		18.0	4.4	18	3.0 - 6.0
	50		16.0	2.2	18	1.2 - 2.4	1.7 - 3.4		20.0	4.8	21	3.4 - 6.8
	60		24.0	2.6	23	1.5 - 2.9	2.1 - 4.2		30.0	5.8	26	4.2 - 8.4
	70		30.4	3.1	25	1.7 - 3.3	2.4 - 4.8		38.0	6.8	28	4.5 - 9.0
3	40	0.033	5.2	1.2	< 15	0.8 - 1.6	1.2 - 2.3	0.015	6.5	2.7	< 15	2.3 - 4.6
	50		8.0	1.5	< 15	1.0 - 2.0	1.4 - 2.8		10.0	3.4	< 15	2.8 - 5.6
	60		12.0	1.8	16	1.2 - 2.5	1.8 - 3.5		15.0	4.0	19	3.5 - 7.0
	70		16.0	2.2	19	1.4 - 2.8	2.0 - 4.1		20.0	4.8	22	4.1 - 8.1
	80		20.8	2.4	23	1.6 - 3.2	2.3 - 4.6		26.0	5.3	26	4.6 - 9.2
	90		25.6	2.7	25	1.8 - 3.5	2.5 - 5.0		32.0	6.0	28	5.0 - 10
	100		29.6	2.9	28	1.9 - 3.9	2.8 - 5.5		37.0	6.5	31	5.5 - 11
4	50	0.044	4.8	1.1	< 15	0.9 - 1.7	1.2 - 2.5	0.020	6.0	2.5	< 15	2.5 - 4.9
	60		6.4	1.4	< 15	1.0 - 2.1	1.5 - 3.0		8.0	3.0	< 15	3.0 - 5.9
	70		7.2	1.6	< 15	1.2 - 2.5	1.8 - 3.5		9.0	3.5	15	3.5 - 7.0
	80		11.2	1.8	16	1.4 - 2.8	2.0 - 4.0		14.0	4.0	19	4.0 - 8.0
	100		17.6	2.3	22	1.7 - 3.4	2.4 - 4.8		22.0	5.0	25	4.8 - 9.6
	120		23.2	2.6	25	1.9 - 3.9	2.8 - 5.5		29.0	5.8	28	5.5 - 11
	135		29.6	2.8	29	2.2 - 4.4	3.2 - 6.4		37.0	6.3	32	6.4 - 12
5	70	0.055	6.0	1.3	< 15	1.1 - 2.1	1.5 - 3.0	0.025	7.5	2.8	< 15	3.0 - 6.0
	80		7.6	1.5	< 15	1.3 - 2.5	1.8 - 3.6		9.5	3.3	15	3.6 - 7.2
	90		8.8	1.7	< 15	1.4 - 2.8	2.0 - 4.0		11.0	3.8	17	4.0 - 8.0
	100		11.2	1.8	17	1.5 - 3.1	2.2 - 4.4		14.0	4.0	20	4.4 - 8.8
	120		15.2	2.2	21	1.8 - 3.5	2.5 - 5.0		19.0	4.8	24	5.0 - 10
	135		17.6	2.4	24	2.0 - 4.0	2.9 - 5.7		22.0	5.3	27	6.0 - 11.4
	150		25.6	2.7	29	2.3 - 4.6	3.3 - 6.5		32.0	6.0	32	6.5 - 13
6	80	0.066	5.6	1.2	< 15	1.1 - 2.2	1.6 - 3.2	0.030	7.0	2.7	< 15	3.2 - 6.4
	90		6.4	1.3	< 15	1.3 - 2.6	1.9 - 3.7		8.0	2.9	< 15	3.7 - 7.4
	100		8.0	1.5	< 15	1.4 - 2.8	2.0 - 4.0		10.0	3.3	16	4.0 - 8.0
	120		10.4	1.8	17	1.6 - 3.2	2.3 - 4.6		13.0	3.9	20	4.6 - 9.2
	135		14.4	2.0	20	1.8 - 3.6	2.6 - 5.2		18.0	4.5	23	5.0 - 10.4
	150		17.6	2.3	24	2.4 - 4.8	3.5 - 6.9		22.0	5.0	27	7.0 - 13.8
	175		24.0	2.7	27	2.5 - 4.9	3.5 - 7.0		30.0	5.9	30	7.0 - 14
7	90	0.077	5.2	1.2	< 15	1.2 - 2.3	1.7 - 3.3	0.035	6.5	2.7	< 15	3.3 - 6.6
	100		5.6	1.3	< 15	1.3 - 2.6	1.9 - 3.7		7.0	2.8	< 15	3.7 - 7.4
	120		8.0	1.5	< 15	1.5 - 3.0	2.1 - 4.3		10.0	3.3	16	4.3 - 8.5
	135		9.6	1.8	16	1.7 - 3.4	2.4 - 4.8		12.0	3.9	19	4.8 - 9.6
	150		12.8	1.9	20	1.9 - 3.9	2.8 - 5.5		16.0	4.3	23	5.5 - 11
	175		17.6	2.3	24	2.2 - 4.4	3.1 - 6.3		22.0	5.0	27	6.3 - 12
	200		23.2	2.7	27	2.6 - 5.3	3.8 - 7.5		29.0	5.9	30	7.5 - 15
8	100	0.088	4.8	1.1	< 15	1.2 - 2.4	1.7 - 3.4	0.040	6.0	2.5	< 15	3.4 - 6.8
	120		6.0	1.2	< 15	1.4 - 2.8	2.0 - 4.0		7.5	2.7	< 15	4.0 - 8.0
	135		8.0	1.5	< 15	1.6 - 3.2	2.3 - 4.5		10.0	3.4	16	4.5 - 9.0
	150		10.4	1.8	17	1.8 - 3.6	2.6 - 5.1		13.0	3.9	20	5.1 - 10
	175		13.6	1.9	21	2.1 - 4.1	3.0 - 5.9		17.0	4.4	24	5.9 - 12
	200		17.6	2.3	25	2.3 - 4.6	3.3 - 6.5		22.0	5.0	28	6.5 - 13
	225		23.2	2.6	27	2.8 - 5.6	4.0 - 8.0		29.0	5.8	30	8.0 - 16

- Performances are based on a length of one meter.
- Throw distance measured at Vt = 0.5 & 0.25 m/s respectively.
- Damper at full open position.

Engineering and Performance Data

Performances at Selected Values of Air Flow Rate (S = 20 mm Standard)

TABLE LD - 06

No. of Slots	Flow Rate (L/S)	Vertical Discharge						Horizontal Discharge				
		Aeff. (m^2)	ΔP_t (Pa)	V eff. (m/s)	Noise Level	Th. (m) w/o Wall Effect	Th. (m) with Wall Effect	Aeff. (m^2)	ΔP_t (Pa)	V eff. (m/s)	Noise Level	Th. (m)
1	15	0.016	3.6	0.9	< 15	0.4 - 0.9	0.6 - 1.3	0.007	4.5	2.1	< 15	1.3 - 2.5
	20		5.6	1.2	< 15	0.6 - 1.1	0.8 - 1.6		7.0	2.7	< 15	1.6 - 3.2
	25		8.8	1.5	< 15	0.7 - 1.4	1.0 - 2.0		11.0	3.4	< 15	2.0 - 4.0
	27		10.4	1.6	< 15	0.8 - 1.5	1.1 - 2.2		13.0	3.6	< 15	2.2 - 4.4
	30		12.0	1.8	< 15	0.9 - 1.7	1.2 - 2.4		15.0	4.0	16	2.4 - 4.8
	35		16.8	2.3	17	1.0 - 2.0	1.4 - 2.8		21.0	5.0	20	2.8 - 5.6
	40		24.8	2.7	23	1.2 - 2.5	1.8 - 3.5		31.0	6.0	26	3.5 - 7.0
2	30	0.032	3.4	0.9	<15	0.6 - 1.2	0.9 - 1.7	0.014	4.3	2.0	< 15	1.7 - 3.4
	35		4.8	1.1	<15	0.7 - 1.4	1.0 - 2.0		6.0	2.5	< 15	2.0 - 4.0
	40		6.4	1.4	< 15	0.8 - 1.7	1.2 - 2.5		8.0	3.0	< 15	2.5 - 4.9
	45		8.0	1.5	< 15	0.9 - 1.9	1.4 - 2.7		10.0	3.4	< 15	2.7 - 5.4
	50		9.6	1.6	< 15	1.0 - 2.0	1.5 - 2.9		12.0	3.6	15	2.9 - 5.8
	60		13.6	1.9	17	1.2 - 2.5	1.8 - 3.5		17.0	4.3	20	3.5 - 7.0
	70		17.6	2.3	21	1.4 - 2.9	2.1 - 4.1		22.0	5.0	24	4.1 - 8.2
3	40	0.048	3.2	0.9	<15	0.7 - 1.4	1.0 - 2.0	0.021	4.0	2.0	< 15	2.0 - 4.0
	50		4.4	1.1	<15	0.8 - 1.7	1.2 - 2.4		5.5	2.4	< 15	2.4 - 4.8
	60		6.0	1.3	< 15	1.0 - 2.0	1.4 - 2.9		7.5	2.8	< 15	2.9 - 5.7
	70		8.0	1.5	< 15	1.2 - 2.3	1.7 - 3.4		10.0	3.4	15	3.4 - 6.7
	80		10.4	1.8	16	1.4 - 2.7	2.0 - 3.9		13.0	4.0	19	3.4 - 7.8
	90		13.6	2.0	19	1.5 - 3.1	2.2 - 4.4		17.0	4.5	22	4.4 - 8.8
	100		16.8	2.2	22	1.7 - 3.4	2.4 - 4.8		21.0	4.9	25	4.8 - 9.6
4	50	0.064	2.8	0.8	< 15	0.7 - 1.5	1.1 - 2.1	0.028	3.5	1.8	< 15	2.1 - 4.2
	60		3.6	1.0	< 15	0.9 - 1.8	1.3 - 2.5		4.5	2.2	< 15	2.5 - 5.0
	70		4.8	1.1	< 15	1.0 - 2.0	1.5 - 2.9		6.0	2.5	< 15	2.9 - 5.8
	80		6.4	1.4	< 15	1.2 - 2.3	1.7 - 3.4		8.0	3.0	< 15	3.4 - 6.7
	100		9.6	1.7	15	1.5 - 2.9	2.1 - 4.2		12.0	3.8	18	4.2 - 8.4
	120		12.8	1.9	20	1.7 - 3.4	2.4 - 4.8		16.0	4.2	23	4.8 - 9.6
	135		16.0	2.2	25	1.9 - 3.9	2.8 - 5.5		20.0	4.9	28	5.5 - 11
5	70	0.080	3.2	0.9	< 15	0.9 - 1.8	1.3 - 2.6	0.035	4.0	2.0	< 15	2.6 - 5.2
	80		4.4	1.0	< 15	1.0 - 2.1	1.5 - 3.0		5.5	2.3	< 15	3.0 - 5.9
	90		5.2	1.1	< 15	1.2 - 2.3	1.7 - 3.3		6.5	2.5	< 15	3.3 - 6.6
	100		6.0	1.3	< 15	1.3 - 2.6	1.9 - 3.8		7.5	2.9	< 15	3.8 - 7.5
	120		8.0	1.5	< 15	1.5 - 3.0	2.2 - 4.3		10.0	3.3	17	4.3 - 8.6
	135		10.0	1.7	17	1.7 - 3.4	2.4 - 4.8		12.5	3.7	20	4.8 - 9.6
	150		12.4	1.8	20	1.9 - 3.7	2.7 - 5.4		15.5	4.1	23	5.5 - 11
6	80	0.096	2.8	0.9	< 15	0.9 - 1.9	1.4 - 2.7	0.042	3.5	1.9	< 15	2.7 - 5.4
	90		3.6	1.0	< 15	1.1 - 2.1	1.5 - 3.0		4.5	2.2	< 15	3.0 - 6.0
	100		4.4	1.1	< 15	1.2 - 2.4	1.7 - 3.4		5.5	2.4	< 15	3.4 - 6.8
	120		5.6	1.3	< 15	1.4 - 2.8	2.0 - 4.0		7.0	2.8	< 15	4.0 - 7.9
	135		7.2	1.4	< 15	1.6 - 3.2	2.3 - 4.5		9.0	3.2	15	4.5 - 9.0
	150		8.8	1.6	16	1.7 - 3.4	2.5 - 4.9		11.0	3.5	19	4.9 - 9.8
	175		12.0	1.8	20	2.0 - 4.0	2.9 - 5.8		15.0	4.0	23	6 - 11.5
7	90	0.120	2.6	0.8	< 15	1.0 - 2.0	1.4 - 2.8	0.049	3.3	1.8	< 15	2.8 - 5.6
	100		3.2	0.9	< 15	1.1 - 2.2	1.6 - 3.1		4.0	2.0	< 15	3.1 - 6.2
	120		4.4	1.1	< 15	1.3 - 2.6	1.8 - 3.7		5.5	2.4	< 15	3.7 - 7.3
	135		5.2	1.2	< 15	1.4 - 2.9	2.1 - 4.1		6.5	2.6	< 15	4.1 - 8.2
	150		6.4	1.4	< 15	1.6 - 3.2	2.3 - 4.6		8.0	3.0	15	4.6 - 9.2
	175		8.8	1.6	17	1.9 - 3.7	2.7 - 5.4		11.0	3.5	20	5 - 10.7
	200		12.0	1.8	21	2.2 - 4.4	3.1 - 6.3		15.0	4.0	24	6 - 12.5
8	100	0.128	2.4	0.8	< 15	1.0 - 2.0	1.5 - 2.9	0.056	3.0	1.7	< 15	2.9 - 5.8
	120		3.2	0.9	< 15	1.2 - 2.3	1.7 - 3.4		4.0	2.0	< 15	3.4 - 6.7
	135		4.0	1.0	< 15	1.3 - 2.6	1.9 - 3.7		5.0	2.3	< 15	3.7 - 7.4
	150		4.8	1.1	< 15	1.5 - 2.9	2.1 - 4.2		6.0	2.5	< 15	4.2 - 8.4
	175		6.4	1.4	< 15	1.7 - 3.4	2.5 - 4.9		8.0	3.0	16	4.9 - 9.8
	200		9.2	1.7	18	2.0 - 4.0	2.9 - 5.8		11.5	3.7	21	6 - 11.5
	225		10.8	1.8	21	2.3 - 4.6	3.3 - 6.5		13.5	4.0	24	6.5 - 13

- Performances are based on a length of one meter.
- Throw distance measured at Vt = 0.5 & 0.25 m/s respectively.
- Damper at full open position.

Engineering and Performance Data

Performances at Selected Values of Air Flow Rate (S = 25 mm)

TABLE LD - 07

No. of Slots	Flow Rate (L/S)	Vertical Discharge						Horizontal Discharge				
		Aeff. (m^2)	ΔP_t (Pa)	V eff. (m/s)	Noise Level	Th. (m) w/o Wall Effect	Th. (m) with Wall Effect	Aeff. (m^2)	ΔP_t (Pa)	V eff. (m/s)	Noise Level	Th. (m)
1	15	0.021	2.4	0.8	< 15	0.3 -0.5	0.4 -0.8	0.009	3.0	1.7	< 15	0.8 - 1.5
	20		3.6	1.0	< 15	0.5 -1.0	0.7 -1.5		4.5	2.2	< 15	1.5 - 2.9
	25		5.2	1.2	< 15	0.6 -1.3	0.9 -1.8		6.5	2.7	< 15	1.8 - 3.6
	27		6.0	1.3	< 15	0.7 -1.3	1.0 -1.9		7.5	2.8	< 15	1.9 - 3.8
	30		7.2	1.4	< 15	0.7 -1.5	1.1 -2.1		9.0	3.1	< 15	2.1 - 4.2
	35		10.4	1.7	< 15	0.9 -1.8	1.3 -2.5		13.0	3.8	< 15	2.5 - 5.0
	40		14.8	2.0	15	1.0 -2.1	1.5 -3.0		18.5	4.5	18	3.0 - 5.9
2	30	0.042	2.0	0.7	< 15	0.5 -1.1	0.8 -1.5	0.018	2.5	1.6	< 15	1.5 - 3.0
	35		2.8	0.9	< 15	0.6 -1.3	0.9 -1.8		3.5	1.9	< 15	1.8 - 3.6
	40		4.0	1.0	< 15	0.7 -1.5	1.1 -2.1		5.0	2.3	< 15	2.1 - 4.2
	45		4.8	1.1	< 15	0.8 -1.6	1.2 -2.3		6.0	2.6	< 15	2.3 - 4.6
	50		5.6	1.2	< 15	0.9 -1.8	1.3 -2.6		7.0	2.7	< 15	2.6 - 5.2
	60		8.0	1.5	< 15	1.1 -2.2	1.6 -3.1		10.0	3.4	< 15	3.1 - 6.2
	70		10.4	1.8	< 15	1.3 -2.6	1.8 -3.7		13	4.0	17	3.7 - 7.3
3	40	0.063	1.4	0.7	< 15	0.6 -1.2	0.9 -1.7	0.027	1.8	1.5	< 15	1.7 - 3.4
	50		2.6	0.8	< 15	0.7 -1.5	1.1 -2.1		3.3	1.8	< 15	2.1 - 4.2
	60		3.8	1.0	< 15	0.9 -1.8	1.3 -2.5		4.8	2.3	< 15	2.5 - 5.0
	70		4.8	1.1	< 15	1.0 -2.0	1.5 -2.9		6.0	2.5	< 15	2.9 - 5.8
	80		6.4	1.3	< 15	1.2 -2.4	1.7 -3.4		8.0	2.9	< 15	3.4 - 6.8
	90		7.6	1.5	< 15	1.3 -2.6	1.9 -3.7		9.5	3.4	< 15	3.7 - 7.4
	100		9.6	1.7	< 15	1.5 -3.0	2.1 -4.3		12.0	3.8	17	4.3 - 8.5
4	50	0.084	1.2	0.6	< 15	0.6 -1.3	0.9 -1.8	0.036	1.5	1.4	< 15	1.8 - 3.6
	60		2.0	0.7	< 15	0.8 -1.5	1.1 -2.2		2.5	1.6	< 15	2.2 - 4.4
	70		2.8	0.8	< 15	0.9 -1.8	1.3 -2.5		3.5	1.9	< 15	2.5 - 5.0
	80		3.6	0.9	< 15	1.0 -2.0	1.5 -2.9		4.5	2.2	< 15	2.9 - 5.8
	100		5.2	1.2	< 15	1.3 -2.6	1.9 -3.7		6.5	2.7	< 15	3.7 - 7.4
	120		6.6	1.4	< 15	1.5 -3.0	2.1 -4.3		8.3	3.0	< 15	4.3 - 8.5
	135		10.0	1.5	16	1.8 -3.5	2.5 -5.0		12.5	3.3	19	5.0 - 10
5	70	0.105	1.6	0.7	< 15	0.8 -1.6	1.2 -2.3	0.045	2.0	1.5	< 15	2.3 - 4.6
	80		2.4	0.8	< 15	0.9 -1.9	1.3 -2.7		3.0	1.7	< 15	2.7 - 5.3
	90		3.0	0.9	< 15	1.1 -2.2	1.6 -3.2		3.8	2.0	< 15	3.2 - 6.4
	100		3.8	1.0	< 15	1.3 -2.6	1.8 -3.7		4.8	2.3	< 15	3.7 - 7.3
	120		4.8	1.1	< 15	1.5 -3.0	2.1 -4.3		6.0	2.5	< 15	4.3 - 8.5
	135		6.4	1.3	< 15	1.6 -3.3	2.3 -4.7		8.0	3.0	< 15	4.7 - 9.3
	150		7.2	1.4	< 15	1.7 -3.4	2.4 -4.9		9.0	3.1	17	4.9 - 9.7
6	80	0.126	1.2	0.6	< 15	0.8 -1.7	1.2 -2.4	0.054	1.5	1.4	< 15	2.4 - 4.8
	90		2.0	0.7	< 15	0.9 -1.9	1.4 -2.7		2.5	1.7	< 15	2.7 - 5.4
	100		2.6	0.8	< 15	1.0 -2.0	1.5 -2.9		3.3	1.8	< 15	2.9 - 5.8
	120		3.4	0.9	< 15	1.2 -2.4	1.7 -3.4		4.3	2.0	< 15	3.4 - 6.8
	135		4.8	1.1	< 15	1.5 -2.9	2.1 -4.2		6.0	2.5	< 15	4.2 - 8.3
	150		5.2	1.2	< 15	1.5 -3.0	2.2 -4.4		6.5	2.6	< 15	4.4 - 8.7
	175		6.4	1.4	< 15	1.8 -3.6	2.6 -5.2		8.0	3.0	16	5.0 - 10
7	90	0.163	0.8	0.6	< 15	0.8 -1.7	1.2 -2.5	0.063	1.0	1.3	< 15	2.5 - 4.9
	100		1.6	0.7	< 15	0.9 -1.9	1.4 -2.7		2.0	1.5	< 15	2.7 - 5.4
	120		2.4	0.8	< 15	1.1 -2.2	1.6 -3.1		3.0	1.7	< 15	3.1 - 6.2
	135		2.8	0.9	< 15	1.3 -2.6	1.9 -3.8		3.5	1.9	< 15	3.8 - 7.5
	150		4.0	1.0	< 15	1.4 -2.8	2.0 -4.0		5.0	2.0	< 15	4.0 - 8.0
	175		5.0	1.1	< 15	1.5 -3.0	2.1 -4.3		6.3	2.5	< 15	4.3 - 8.5
	200		6.0	1.4	< 15	1.9 -3.7	2.7 -5.4		7.5	3.0	15	5.0-10.7
8	100	0.168	0.6	0.6	< 15	0.9 -1.8	1.3 -2.5	0.072	0.8	1.3	< 15	2.5 - 5.0
	120		1.6	0.7	< 15	1.0 -2.0	1.5 -2.9		2.0	1.5	< 15	2.9 - 5.8
	135		2.0	0.8	< 15	1.2 -2.4	1.7 -3.4		2.5	1.8	< 15	3.4 - 6.8
	150		3.0	0.9	< 15	1.3 -2.7	1.9 -3.8		3.8	2.0	< 15	3.8 - 7.6
	175		4.0	1.0	< 15	1.5 -3.0	2.2 -4.4		5.0	2.3	< 15	4.4 - 8.7
	200		5.2	1.2	< 15	1.8 -3.5	2.5 -5.0		6.5	2.6	< 15	5.0 - 10
	225		6.0	1.3	< 15	1.9 -3.9	2.8 -5.5		7.5	2.8	16	5.5 - 11

- Performances are based on a length of one meter.
- Throw distance measured at Vt = 0.5 & 0.25 m/s respectively.
- Damper at full open position.

Ordering Data

- **Available Surface Finishes For Linear Slot Diffusers :**
  - Natural / Matt Silver Anodized .
  - Powder Coating (Standard Colors are white RAL 9010/ 9016, other optional colors if required to be provided in RAL-No. only and charged extra).
  - Aluminium in Mill Finish.
  - Other Special Finishes (on request if available).
- **Available Surface Finishes For Hit - and - Miss Damper & Deflection Blades :**
  - Matt Black Powder Coating only as standard.
- **Ordering Specifications :**

Specify :

1. Linear Slot Diffuser Description (Supply, Return, Extract, Dummy,..... etc.).
2. No. of Slots.
3. Linear Slot Diffuser Length.
4. Quantity.
5. Linear Slot Diffuser Surface Finish.
6. RAL - No.(only mention if powder coating surface finish is required).
7. Curve (only mention if required in curved shape).
8. End Caps (to be mentioned as required).
9. Slot opening / width (only indicate if not standard, i.e. for 16 or 25 mm only).

Example 1 :

1	2	3	4	5	6	7	8	9
SLD	3	1000 mm	30	Powder Coating	9016	–	End Cap at both Sides	–

Example 2 :

1	2	3	4	5	6	7	8	9
RLD	6	2.85 m	15	Silver Anodized	–	Curve	–	25 mm

Example 3 :

1	2	3	4	5	6	7	8	9
DLD	4	120 "	10	Powder Coating	1013 (Optional)	–	End Cap at one Side	16 mm

BEST CHOICE INDUSTRIES L.L.C.

MANUFACTURING CENTRAL AIR CONDITIONING AIR OUTLETS

Tel. : 04 - 88 55 422, Fax : 04 - 88 55 421, P.O. Box: 31567, Dubai - U. A. E. - E-mail: bcillc@emirates.net.ae

CHAPTER 4

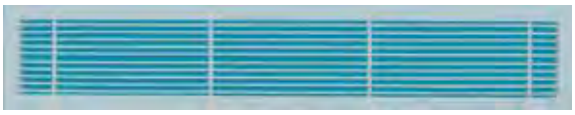

LINEAR BAR GRILLES AND REGISTERS

CHAPTER-4

LINEAR BAR GRILLES AND REGISTERS

LINEAR BAR GRILLES AND REGISTERS

The fixed Bar Grilles / Registers are used satisfactorily in locations where flow direction is not critical or can be predetermined. The Linear Grilles / Registers with fixed horizontal bars satisfy the architectural requirements of large areas where continuous input along the walls is requested for wall mounted installations, windowsill and covering furniture for fan coils.

Features & Characteristics :

- Construction : Frame & Face bars are made of high quality Extruded Aluminium Profiles of 6063 Alloy.
- Frame Flange width : 30 mm.
- Face Bars (core style) : available in two different bar deflections, the standard one is the 15 ° - 2 way deflection and the optional one is the 15 ° - 1 way deflection (see table No. LG - 02).
- Bar Spacing : Spacing of the adjacent fixed bar blades are set at 12 mm as standard. Also available in 9 and 6 mm spacing as an option (see table No. LG - 02).
- Available with vertical Aluminium aerofoil rear blades fixed to the frame by means of nylon bushes. These blades can be adjusted manually and individually in the vertical plane to achieve the optimum throw deflection and air distribution.
- The frame is assembled by punching it's four corners by means of G. I. Angles which together create a very robust construction.
- For Continuous runs, units are supplied in sections and can be designed to incorporate additional features such as active / dummy sections and mitered corners (see table No. LG - 03, 04, 05 & 06).
- To maintain perfect and unbroken appearance for continuous runs, alignment joining strips are provided in proper lengths and quantities with no extra cost.
- Available in wide variety of standard heights ranging from 50 mm neck size up to 300 mm in 50 mm increments (other none standard sizes are available on request).
- Linear Bar Grilles combined with Opposed Blade Damper are called Linear Bar Registers.
- Mullion Pipes across the fixed bar blades provide additional strength and rigid construction. These Pipes are placed at a distance of 300 mm maximum from each other.
- Accessories : see page No. LG - 07.
- Available Fixing Mounting : see page No. LG - 08.
- Surface Finishes : see page No. LG - 13.

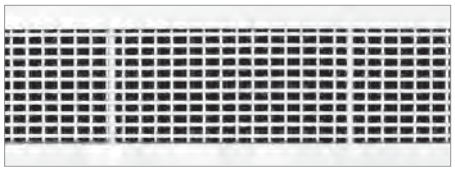

Models Available :

TABLE LG - 01

Linear Bar Grilles / Registers Model	Fixed Bar Blades w/o Vertical Rear Blades	Fixed Bar Blades with Vertical Rear Blades	Opposed Blade Damper
SLR		●	●
SLG		●	
RLR	●		●
RLG	●		

● Available.

Core Styles (Deflection and Spacing)

TABLE LG - 02

15 ° - Two Way Deflection

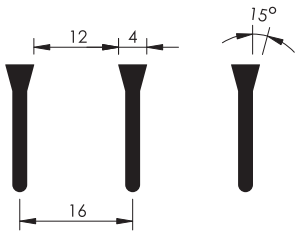

Standard

Spacing = 12 mm

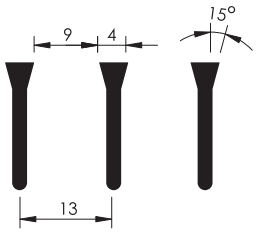

Optional

Spacing = 9 mm

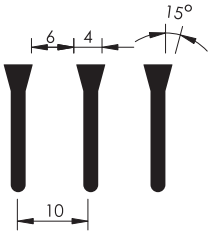

Optional

Spacing = 6 mm

15 ° - One Way Deflection

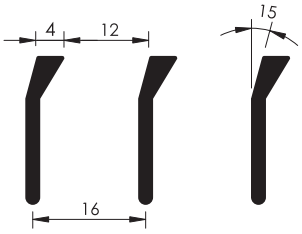

Optional

Spacing = 12 mm

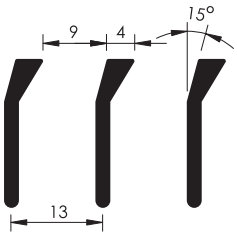

Optional

Spacing = 9 mm

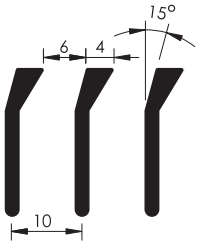

Optional

Spacing = 6 mm

- All Dimensions are in mm and subject to ± 0.5 mm tolerance.

TABLE LG - 03

OPERATING RANGE & QUICK SELECTION TABLE FOR LINEAR BAR GRILLES / REGISTERS

WITH VERTICAL REAR BLADES					W/O REAR BLADES				
Standard Heights		Length	CFM Range		Standard Heights		Length	CFM Range	
Inch	mm	mm			Inch	mm	mm		
4"	100	1000	350	800	4"	100	1000	500	1100
6"	150		550	1250	6"	150		725	1650
8"	200		725	1700	8"	200		950	2100
10"	250		850	2000	10"	250		1250	2500
12"	300		1080	2300	12"	300		1450	3400
4"	100	1500	550	1250	4"	100	1500	700	1600
6"	150		800	1850	6"	150		1075	2350
8"	200		1080	2300	8"	200		1425	3150
10"	250		1300	2600	10"	250		1875	3750
12"	300		1600	3700	12"	300		2175	5100
4"	100	2000	750	1600	4"	100	2000	1000	2200
6"	150		1100	2500	6"	150		1450	3300
8"	200		1450	3400	8"	200		1900	4200
10"	250		1700	4000	10"	250		2500	5000
12"	300		2160	4600	12"	300		2900	6800

- CFM Values are based on Noise Level ranging from 15 - 35 (dB).

TABLE LG - 04

NO. OF SECTIONS PER RUNNING UNIT				
LINEAR BAR GRILLE / REGISTER HEIGHT		ONE SECTION	TWO SECTIONS	MULTI SECTIONS
mm	Inch			
50	2 "	≤ 4.0	> 4.0	> 6.0
100	4 "	≤ 4.0	> 4.0	> 6.0
150	6 "	≤ 4.0	> 4.0	> 6.0
200	8 "	≤ 4.0	> 4.0	> 6.0
250	10"	≤ 3.5	> 3.5	> 6.0
300	12"	≤ 3.5	> 3.5	> 6.0

- Above arrangements are approximate and subject to change according to order / site conditions.

MITERED CORNERS

TABLE LG - 05

Wall Mounted Corners

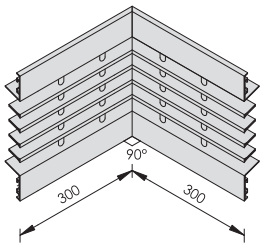

1) Inside 90° Corner Standard

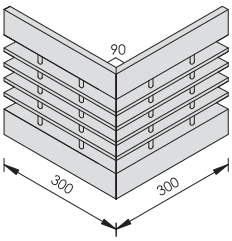

2) Outside 90° Corner Standard

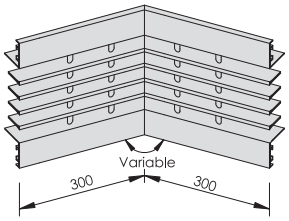

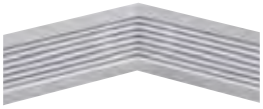

3) Variable Angle Inside/Outside Corner Optional

TABLE LG - 06

Ceiling Mounted Corners

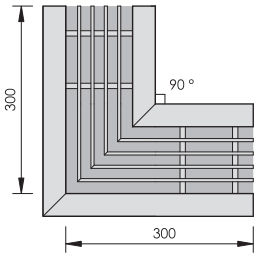

4) 90° Corner Optional

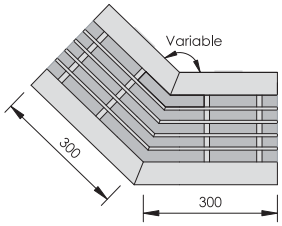

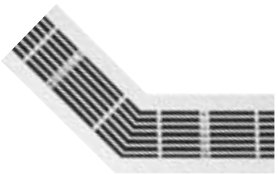

5) Variable Angle Corner Optional

- Corners are always supplied in 300 x 300 mm adjacent sides as standard unless otherwise specified or required.

End Cap / Flange Arrangements

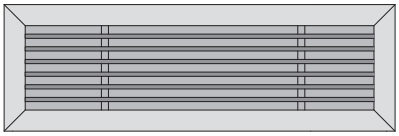

End Cap at Both Sides

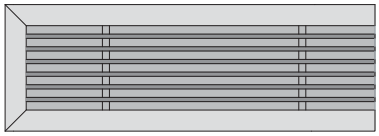

End Cap at One Side

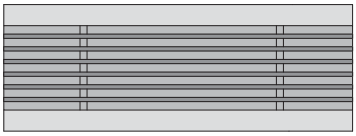

Open Ends

Linear Bar Grilles / Registers in Curved Shape

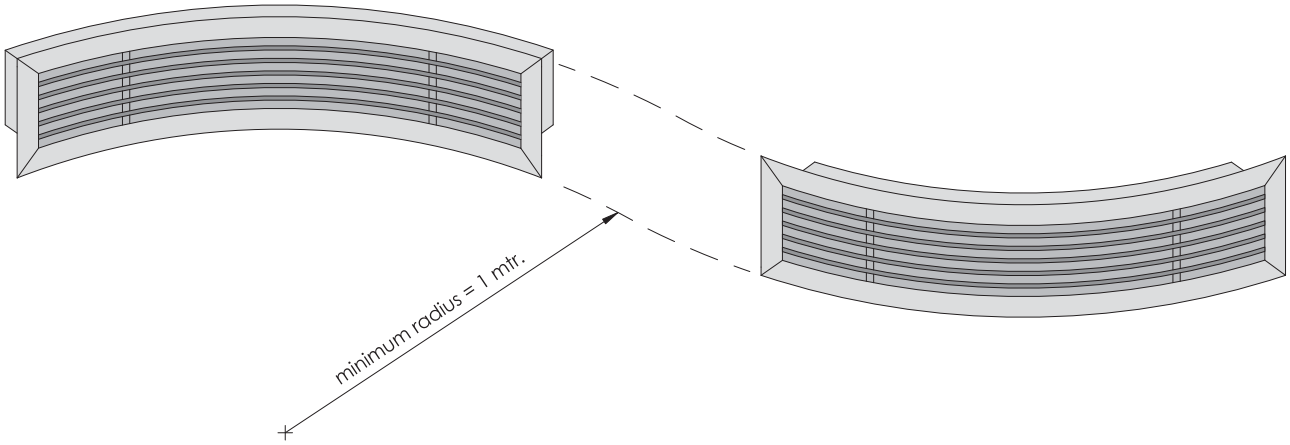

Inside Curve
(Concave Shape)

Outside Curve
(Convex Shape)

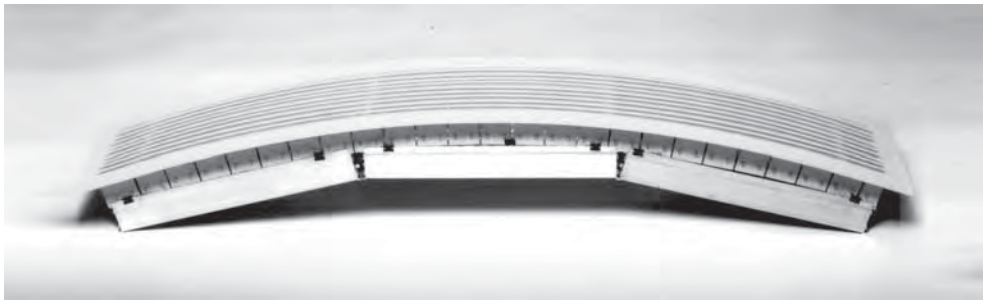

- Curves can be fabricated in minimum curvature radius = 1 mtr.
- Curve applications can be fabricated also for linears with rear blades.
- Curve applications are not possible for ceiling installements.

Linear Bar Registers with Vertical Rear Blades
Construction and Dimensional Details

Model SLR DD

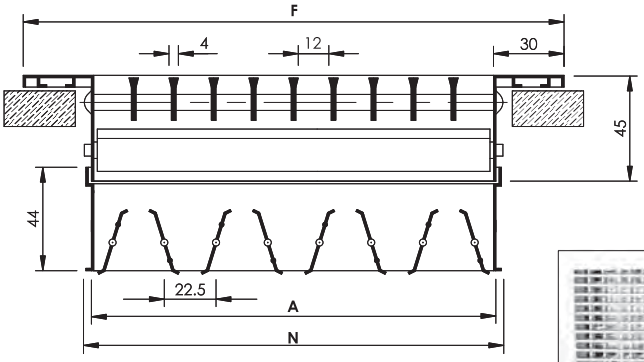

Bar Spacing = 12 mm (standard)

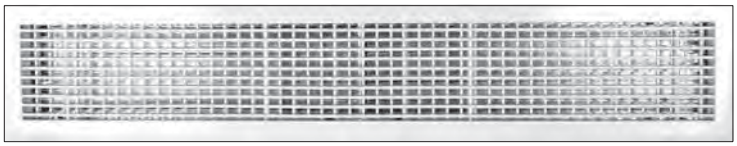

- **SLR** : is Supply Air Linear Bar Register, fixed horizontal front bar blades, adjustable vertical rear blades, c/w Opposed Blade Damper.
- Registers called Supply Air Linear Bar Register and coded as **SLR** are always equipped with Opposed Blade Damper (provided as standard).

Linear Bar Grilles with Vertical Rear Blades
Construction and Dimensional Details

Model SLG DD

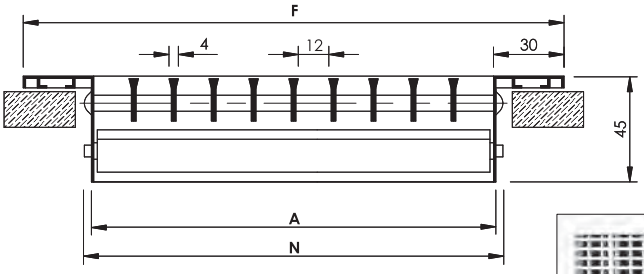

Bar Spacing = 12 mm (standard)

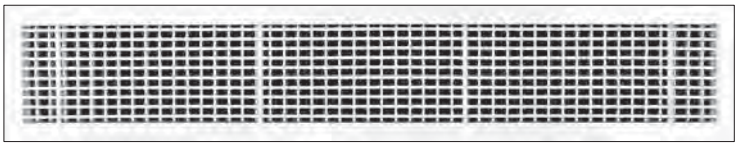

- **SLG** : is Supply Air Linear Bar Grille, fixed horizontal front bar blades, adjustable vertical rear blades w/o Opposed Blade Damper.
- Grilles called Supply Air Linear Bar Grille and coded as **SLG** are usually supplied w/o Opposed Blade Damper.

N : Nominal/Listed Size = Length (L) x Height (H)
A : Actual Size = (L-10) x (H-10)
F : Face Size = (L+50) x (H+50)

- Linear Bar Grilles / Registers furnished approximately 10 mm less than the Nominal/Listed Size.
- All dimensions are in mm and subject to ±1 mm tolerance.

Linear Bar Registers Without Rear Blades
Construction and Dimensional Details

Model RLR SD

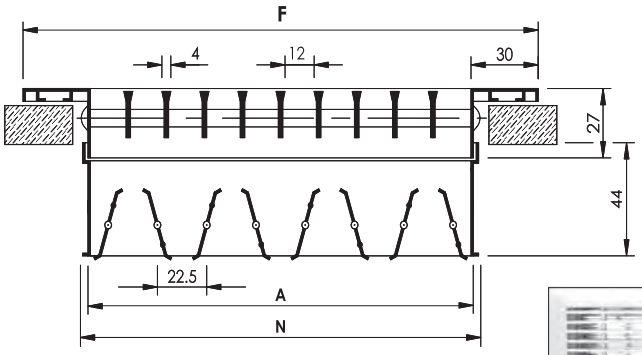

Bar Spacing = 12 mm (standard)

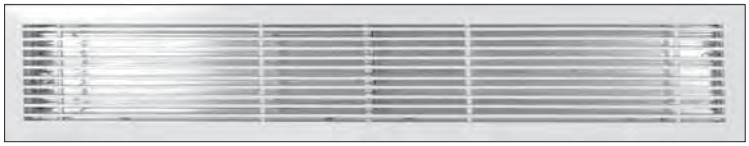

- **RLR** : is Return Air Linear Bar Register, fixed horizontal front bar blades, w/o rear blades, and c/w Opposed Blade Damper.
- Registers called Return Air Linear Bar Register and coded as **RLR** are always equipped with with Opposed Blade Damper (provided as standard).

Linear Bar Grilles Without Rear Blades
Construction and Dimensional Details

Model RLG SD

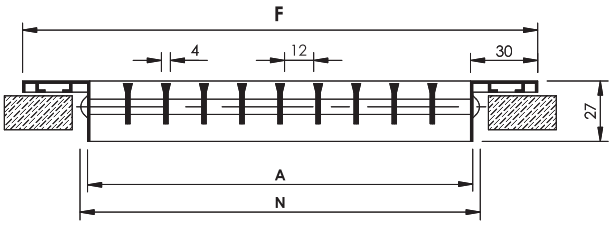

Bar Spacing = 12 mm (standard)

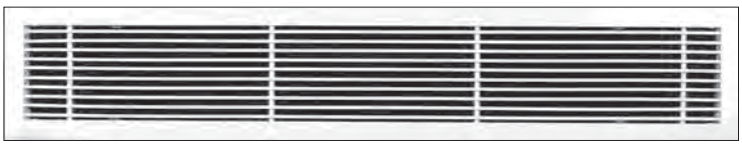

- **RLG** : is Return Air Linear Bar Grille, fixed horizontal front bar blades, w/o rear blades and Opposed Blade Damper.
- Grilles called Return Air Linear Bar Grille and coded as **RLG** are usually supplied w/o Opposed Blade Damper.

N	: Nominal/Listed Size	= Length (L) x Height (H)
A	: Actual Size	= (L-10) x (H-10)
F	: Face Size	= (L+50) x (H+50)

- Linear Bar Grilles / Registers furnished approximately 10 mm less than the Nominal/Listed Size.
- All dimensions are in mm and subject to ±1 mm tolerance.

Linear Bar Grilles and Registers Accessories

A. Opposed Blade Damper

- Frame and Blades are of high quality Extruded Aluminium Profiles construction.
- Blades are designed to rotate opposite to each other.
- The specially designed blades have an overlapping lip which assures a tight closure.
- Generally, the opposed blade damper is attached to the linear bar grille and fixed to it by means of " S "clips.
- Blades are separated from it's frame by nylon bushes. This method of assembly provides maximum rattle - free performance and eliminates corrosion.
- Usually Damper standard surface finish is Aluminium in Mill Finish. Matt black powder coating color is also available on request (as an option).
- Screw type operation.

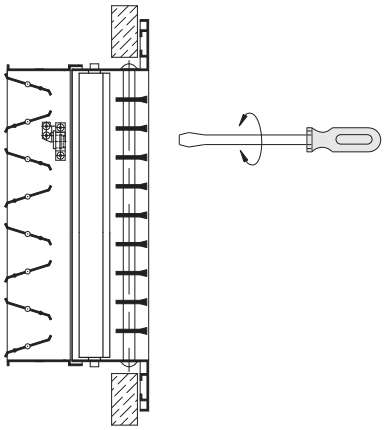

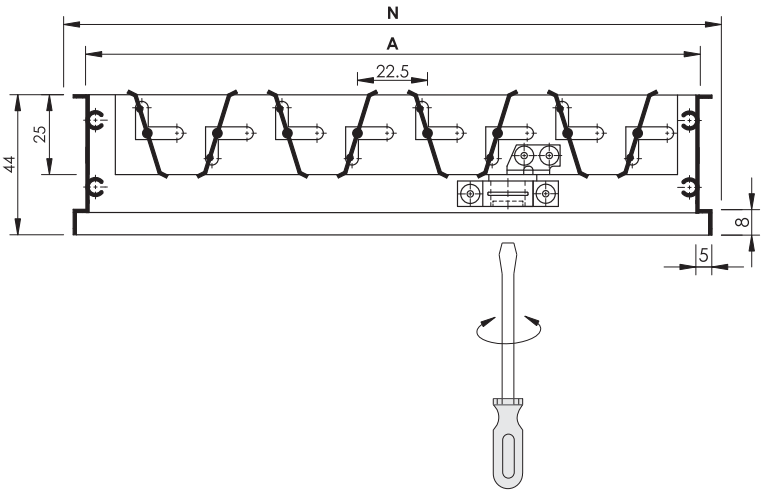

- The range from full open to full closed position of Damper blades can be easily adjusted by a screw driver accessable from the face of the linear bar register as shown in the figure.
- All dimensions are in mm and subject to ±1 mm tolerance.

B. Foam Type Rubber Gasket (Optional)

- Gasket type : Single Sided Self - Adhesive Foam.
- Gasket Function : Sealing.
- Gasket Benefits :
  - Stops Linear Bar Grille / Register rattling.
  - Minimize air infiltration.
  - Stops leaks and pressure losses.
  - Takes up unevenness of ceiling.
  - Easy to apply on site or in factory.
- To be applied around the perimeter of the back side of the Linear Bar Grille/Register to act as an air seal to prevent pressurised air from escaping from the sides of the outer frame when fixed to the wall.

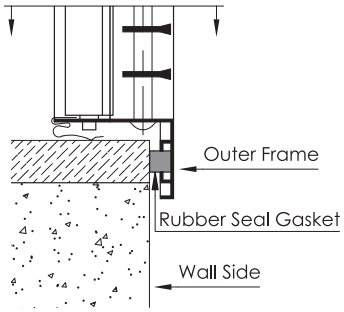

Cross Sectional Drawings for Profiles used in Linear Bar Grilles / Registers

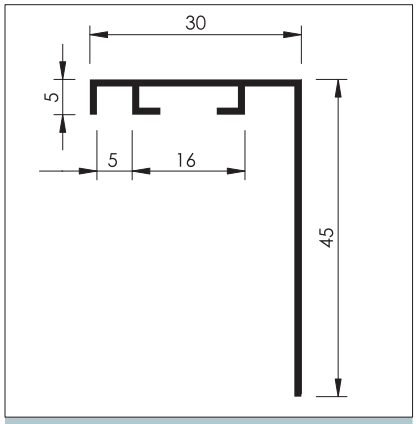

Frame Profile Section

For Linear Bar Grilles and Registers with Rear Blades

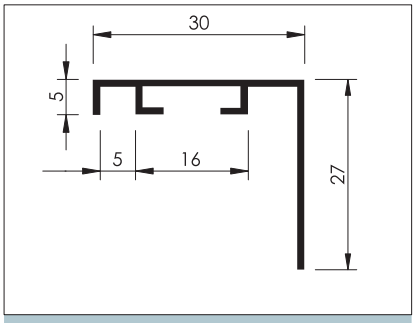

Frame Profile Section

For Linear Bar Grilles and Registers w/o Rear Blades

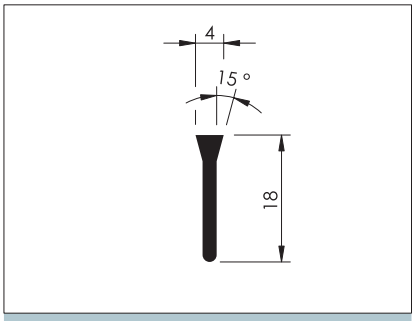

15° 2-Way Deflection Bar Blade Section

Linear Bar Grilles and Registers

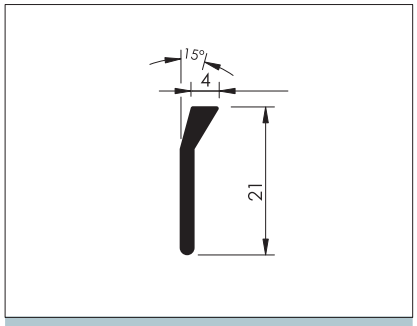

15° 1-Way Deflection Bar Blade Section

Linear Bar Grilles and Registers

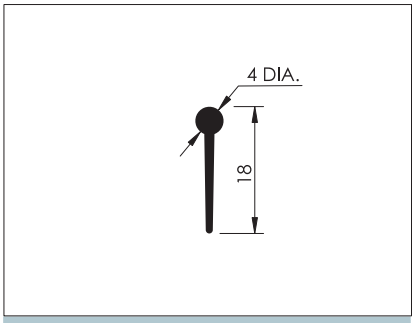

Aerofoil Vertical Rear Blade Section

Linear Bar Grilles and Registers

- All dimensions are in mm and subject to ± 0.2 mm tolerance.

Available Fixing Mounting

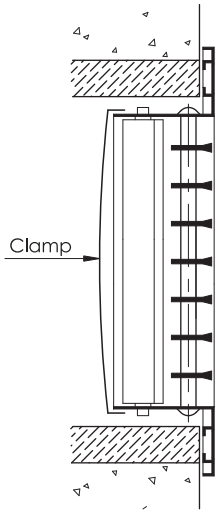

A. Concealed Fixing (Clamp Mounting)

- The Linear bar Grille / Register is fixed by means of aluminium clamp to the wall or ceiling where no screws are visible. Usually used when the Grille / Register is more than one meter in length.

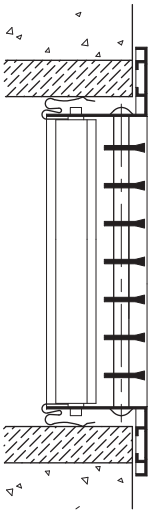

B. Concealed Fixing (Spring Clip Mounting)

- The Linear bar Grille / Register is fixed by means of spring clips to the wall where no screws are visible. Usually used when the Grille / Register is one meter or less in length.

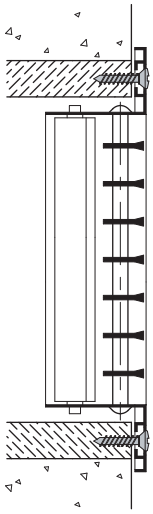

C. Face Screw Fixing

- The Linear bar Grille / Register is fixed to the wooden frame by means of visible screws. Can be used for any Grille / Register length.

Engineering and Performance Data

TABLE LG - 07

EFFECTIVE AREA VALUES FOR LINEAR BAR GRILLES / REGISTERS WITH VERTICAL REAR BLADES MODEL SLR DD and SLG DD				
Height		Bar Spacing		
Inch	mm	@ 12 mm	@ 9 mm	@ 6 mm
2"	50	0.023	0.023	0.019
3"	75	0.038	0.034	0.030
4"	100	0.049	0.045	0.038
6"	150	0.076	0.068	0.057
8"	200	0.102	0.094	0.079
10"	250	0.128	0.117	0.098
12"	300	0.155	0.140	0.117
14"	350	0.185	0.170	0.143
16"	400	0.215	0.200	0.170
18"	450	0.246	0.230	0.196
20"	500	0.276	0.261	0.223
22"	550	0.306	0.291	0.249
24"	600	0.337	0.321	0.276

- Values are in m^2 and per one meter of running length.
- Damper at full open position.

TABLE LG - 08

EFFECTIVE AREA VALUES FOR LINEAR BAR GRILLES / REGISTERS W/O REAR BLADES MODEL RLR SD and RLG SD				
Height		Bar Spacing		
Inch	mm	@ 12 mm	@ 9 mm	@ 6 mm
2"	50	0.031	0.031	0.027
3"	75	0.051	0.047	0.043
4"	100	0.067	0.063	0.055
6"	150	0.103	0.095	0.084
8"	200	0.139	0.132	0.116
10"	250	0.176	0.164	0.145
12"	300	0.212	0.197	0.174
14"	350	0.252	0.237	0.210
16"	400	0.292	0.277	0.246
18"	450	0.332	0.317	0.282
20"	500	0.372	0.357	0.319
22"	550	0.412	0.397	0.355
24"	600	0.452	0.437	0.391

- Values are in m^2 and per one meter of running length.
- Damper at full open position.

Engineering and Performance Data
General Selection Diagram

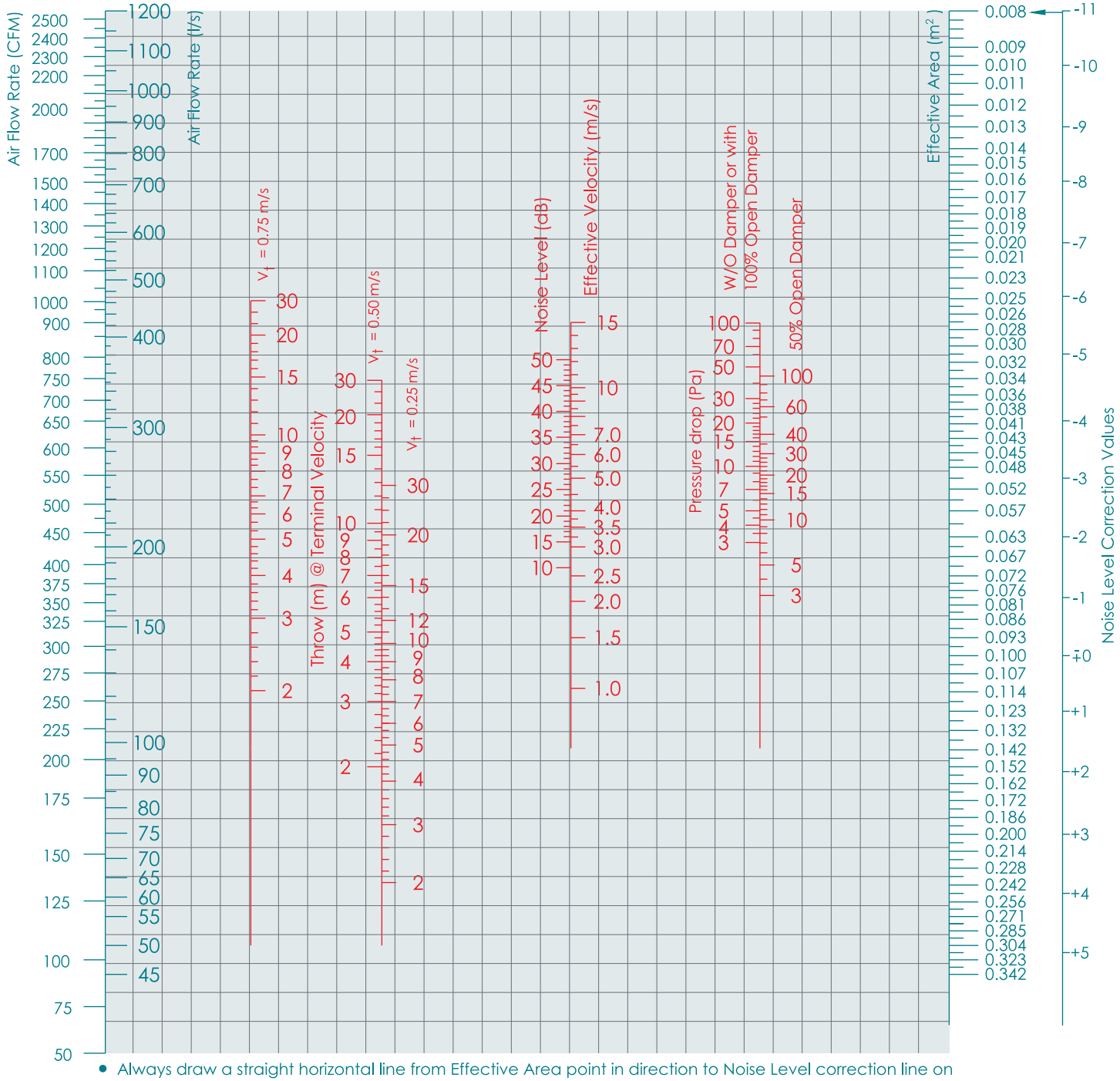

- Always draw a straight horizontal line from Effective Area point in direction to Noise Level correction line on right side to obtain it's correction value.

Correction Multipliers / Values :

Blades Deflection	22 1/2 °	45 °
Velocity	x 1.20	x 1.40
Pressure Drop	x 1.30	x 1.60
Throw	x 0.80	x 0.60
Noise Level	+ 2.0	+ 3.0

How to use this Diagram ?

Case I : Size and Air Flow Rate are given

Illustrative Example :

Given Data : Required Model : SLR DD
Bar Spacing : 12 mm
Nominal Size : 1500 x 200 mm
Air Flow Rate : 750 CFM

Assume Damper at full open position.

See Page No. LG - 10 Table No. LG - 09, Effective Area = 0.155 m^2,

Apply the CFM and Effective Area values to the diagram and draw a straight line connecting both of them, easily from the intersection you can read all the related data as below :-

$V_{eff.}$ = 2.6 m/s (intersection point of drawn line with $V_{eff.}$ vertical line).

Noise Level <15 dB (the Value where the drawn line intersecting the Noise Level Vertical line after checking Noise Level correction values).

Pressure Drop < 3 Pa (from the same $V_{eff.}$ point draw a horizontal line intersecting the opposite Pressure Drop vertical line and read this value).

Throw @ V_t = 0.25 m/s > 30 m (Intersection point of drawn line with Throw vertical line @ V_t = 0.25 m/s).

@ V_t = 0.50 m/s = 14.0 m (Intersection point of drawn line with Throw vertical line @ V_t = 0.50 m/s).

@ V_t = 0.75 m/s = 8.0 m (where the drawn line intersecting the Throw vertical line @ V_t =0.25 and 0.50 m/s draw a horizontal straight line toward the opposite Throw vertical line @ V_t = 0.75 m/s and read this value).

Case I : Size and Air Flow Rate are given

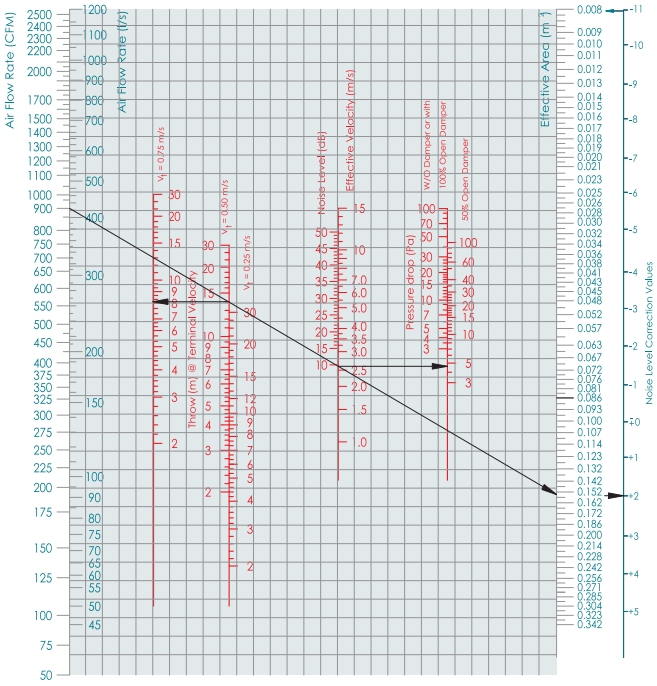

Case II : Air Flow Rate and Noise Level are given

Illustrative Example :

Given Data : Required Model : RLG SD
Bar Spacing : 6 mm
Air Flow Rate : 600 CFM
Noise Level : not to exceed 30 dB

Assume $V_{eff.}$ = 3.0 m/s to find that Noise Level = (14 - 0) = 14 (Not exceeding 30 dB), then other related data can be read as below :-

Effective Area = 0.09 m^2.

See page No. LG - 09 table No. LG - 08, (@ Bar Spacing = 6 mm) if you choose 4 " grille height, the Effective Area for the same = 0.055 m^2 per one meter length, so the required grille length will be 0.09/0.055 = 1.64 m.

Grilles Nominal Size = 1640 x 100 mm.

Pressure Drop = 3.0 Pa.

Throw Values : not required for Return Air Grilles.

Case II : Air Flow Rate and Noise Level are given

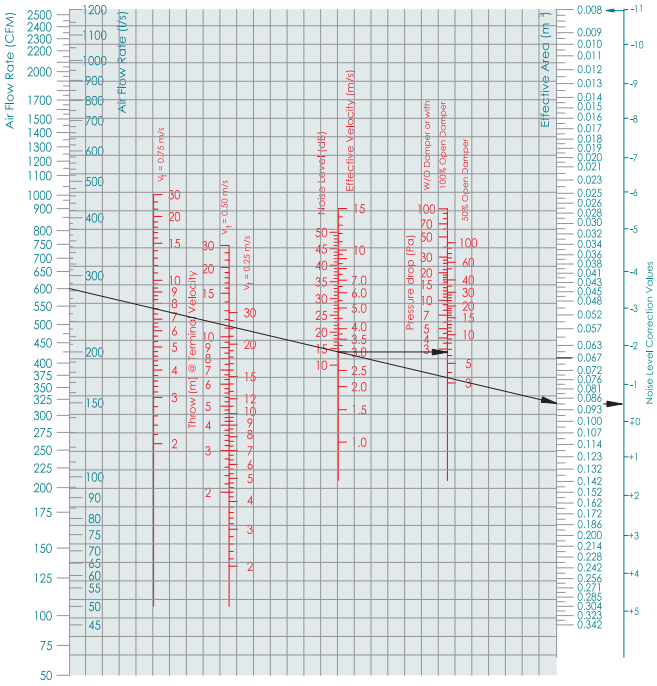

How to use this Diagram ?

Case I : Size and Air Flow Rate are given

Illustrative Example :

Given Data : Required Model : SLR DD
Bar Spacing : 12 mm
Nominal Size : 1500 x 200 mm
Air Flow Rate : 750 CFM

Assume Damper at full open position.

See Page No. LG - 10 Table No. LG - 09, Effective Area = 0.155 m ^{2},

Apply the CFM and Effective Area values to the diagram and draw a straight line connecting both of them, easily from the intersection you can read all the related data as below :-

$V_{eff.}$ = 2.6 m/s (intersection point of drawn line with $V_{eff.}$ vertical line).

Noise Level <15 dB (the Value where the drawn line intersecting the Noise Level Vertical line after checking Noise Level correction values).

Pressure Drop < 3 Pa (from the same $V_{eff.}$ point draw a horizontal line intersecting the opposite Pressure Drop vertical line and read this value).

Throw @ V_t = 0.25 m/s > 30 m (Intersection point of drawn line with Throw vertical line @ V_t = 0.25 m/s).

@ V_t = 0.50 m/s = 14.0 m (Intersection point of drawn line with Throw vertical line @ V_t = 0.50 m/s).

@ V_t = 0.75 m/s = 8.0 m (where the drawn line intersecting the Throw vertical line @ V_t =0.25 and 0.50 m/s draw a horizontal straight line toward the opposite Throw vertical line @ V_t = 0.75 m/s and read this value).

Case I : Size and Air Flow Rate are given

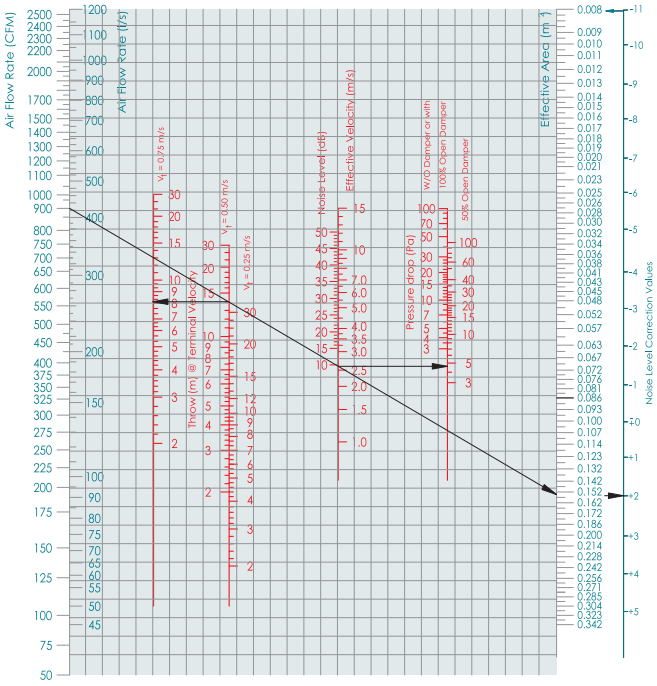

Case II : Air Flow Rate and Noise Level are given

Illustrative Example :

Given Data : Required Model : RLG SD
Bar Spacing : 6 mm
Air Flow Rate : 600 CFM
Noise Level : not to exceed 30 dB

Assume $V_{eff.}$ = 3.0 m/s to find that Noise Level = (14 - 0) = 14 (Not exceeding 30 dB), then other related data can be read as below :-

Effective Area = 0.09 m ^{2}.

See page No. LG - 09 table No. LG - 08, (@ Bar Spacing = 6 mm) if you choose 4 " grille height, the Effective Area for the same = 0.055 m ^{2} per one meter length, so the required grille length will be 0.09/0.055 = 1.64 m.

Grilles Nominal Size = 1640 x 100 mm.

Pressure Drop = 3.0 Pa.

Throw Values : not required for Return Air Grilles.

Case II : Air Flow Rate and Noise Level are given

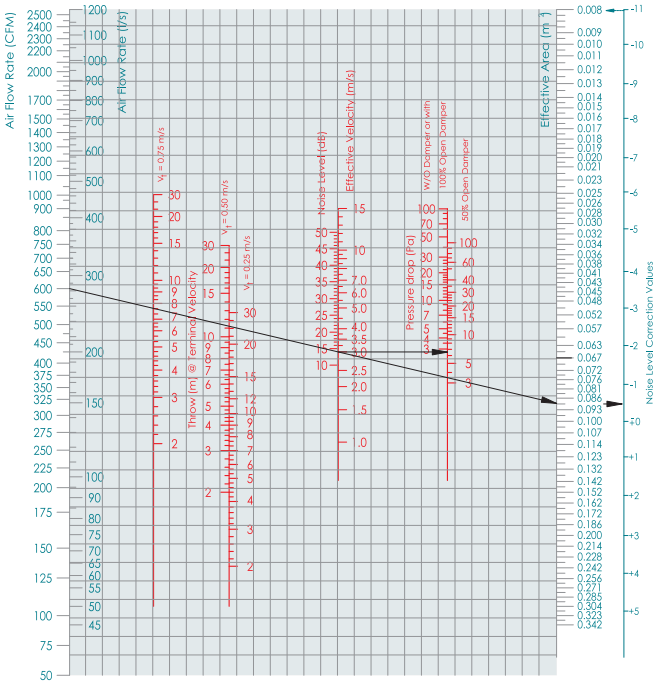

Ordering Data

• Available Surface Finishes For Linear Bar Grilles and Registers :

- Natural / Matt Silver Anodized .
- Powder Coating (Standard Colors are white RAL 9010 / 9016, other optional colors if required to be provided in RAL - No. only and charged extra).
- Aluminium in Mill Finish.
- Other Special Finishes (on request if available).

• Available Surface Finishes For Opposed Blade Dampers :

- Aluminium in Mill Finish (standard).
- Matt Black Powder Coating (optional).

• Ordering Specifications :

Specify :

1 . Linear Bar Grille / Register Description (Supply, Return, Extract, Dummy, ... etc.).
2 . Fixed Front Bar blades with or w/o vertical rear blades.
3 . Opposed Blade Damper Surface Finish (only mention if required in black color).
4 . Linear Bar Grille / Register Height.
5 . Linear Bar Grille / Register Length.
6 . Quantity.
7 . Linear Bar Grille / Register Surface Finish.
8 . RAL - No.(only mention if powder coating surface finish is required).
9 . Type of Fixing (see page No. LG - 08).
10 . Optional Accessories (Gasket, or others).
11 . Fabrication Notes : only mention if any the following is required :
- 15° - one way deflection.
- Non-standard spacing, 6 or 9 mm.
- Curved shaped.

Example 1 :

1	2	3	4	5	6	7	8	9	10	11
SLR	DD	BD	H = 6" or 150 mm	1200 mm	62	Powder Coating	9016	Clamp	–	–

Example 2 :

1	2	3	4	5	6	7	8	9	10	11
SLG	DD	–	H = 8" or 200 mm	60"	120	Silver Anodized	–	Spring Clip	With Rubber Gasket	15 ° one way

Example 3 :

1	2	3	4	5	6	7	8	9	10	11
RLG	SD	–	H = 12" or 300 mm	2130 mm	3	Powder Coating	1013 (Optional)	Screw	–	Curve

BEST CHOICE INDUSTRIES L.L.C.

MANUFACTURING CENTRAL AIR CONDITIONING AIR OUTLETS

Tel. : 04 - 88 55 422, Fax : 04 - 88 55 421, P.O. Box: 31567, Dubai - U. A. E. - E-mail: bcillc@emirates.net.ae

CHAPTER 5

PERFORATED
CEILING DIFFUSERS

CHAPTER-5

PERFORATED CEILING DIFFUSERS

PERFORATED CEILING DIFFUSERS

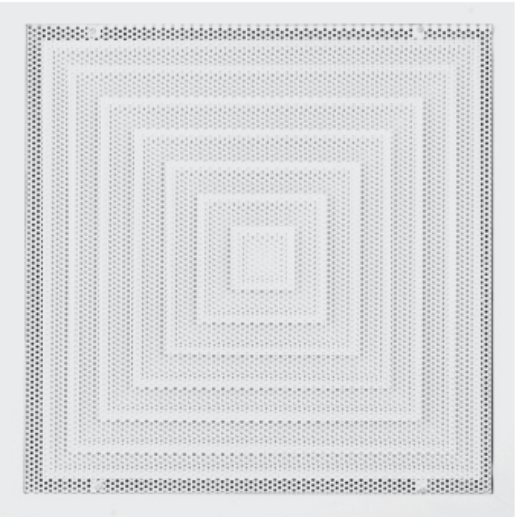

The **BCI** Perforated Diffusers provides a modern silent and draft-free range of diffusers designed to blend effectively with modern ceiling styles and profiles. Offering excellent uniform air distribution patterns the unit comprises of an extruded aluminium frame with a perforated steel sheet face, 50 % free area, and square cones (core) concealed behind the perforated face positioned to give 4, 3, 2 or 1 way discharge as required for the supply units. While return, extract or exhaust units are normally supplied without this feature for straight forward extract application.
These diffusers have high diffusion induction rates, resulting in rapid temperature and velocity equalization of the mixed air mass before the supply air enter the occupied space.
As an alternative use also, the perforated diffusers have been designed to meet architectural requirements as to appearance, module size or other aesthetic considerations.

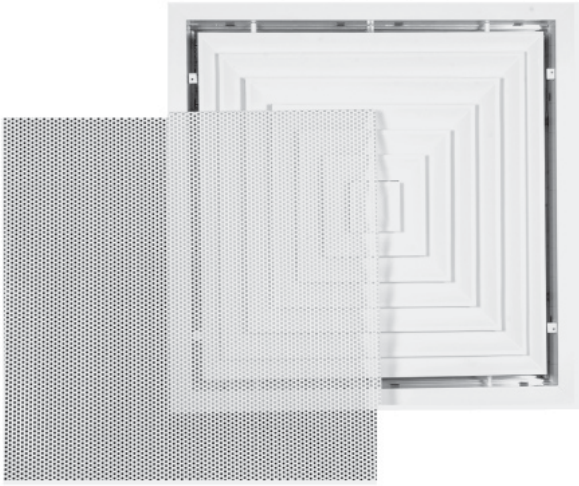

Features & Characteristics :

- Construction : Frame & inner cones (core) are made of high quality Extruded Aluminium Profiles of 6063 Alloy.
- Frame Flange width : 30 mm.
- Perforated Face : made of G.I. Perforated sheet of 0.8 mm thickness with 4 mm Ø perforation at a pitch of 6 mm to produce 50 % free area.
- Units are flush mounted available with different pattern arrangements 4,3,2&1way (i.e. different ways of air discharge directions).
- Available in wide variety of square neck sizes ranging up to the most popular used 600 x 600 mm module with 595 x 595 mm outer frame size making it suitable forstandard false ceiling panel replacement.
- The perforated screen shall be removable from the diffuser face and fitted with screws to facilitate the removal of face screen to provide easy access to :
  - Installation.
  - Adjustment of key operated OBD.
  - Maintenance and cleaning.
  - Core exchange by different pattern in future.

  The core is held in place and fixed to the frame by two loaded spiral galvanized steel springs.
- For a better supply air mixing, increase of throw and induction, more sound containing and easy connection to duct system, G.I. Neck adaptor is available as an option.
- Perforated diffusers project from the mounting surface by 5 mm.
- Accessories : see page No. PD-03.
- Mounting Instructions : refer to page No. CD-09, Chapter (1).
- Surface Finishes : see page No. PD-05.

Models
Construction and Dimensional Details

Model PSCD 4WS , Standard Module 600 x 600 mm Face Size

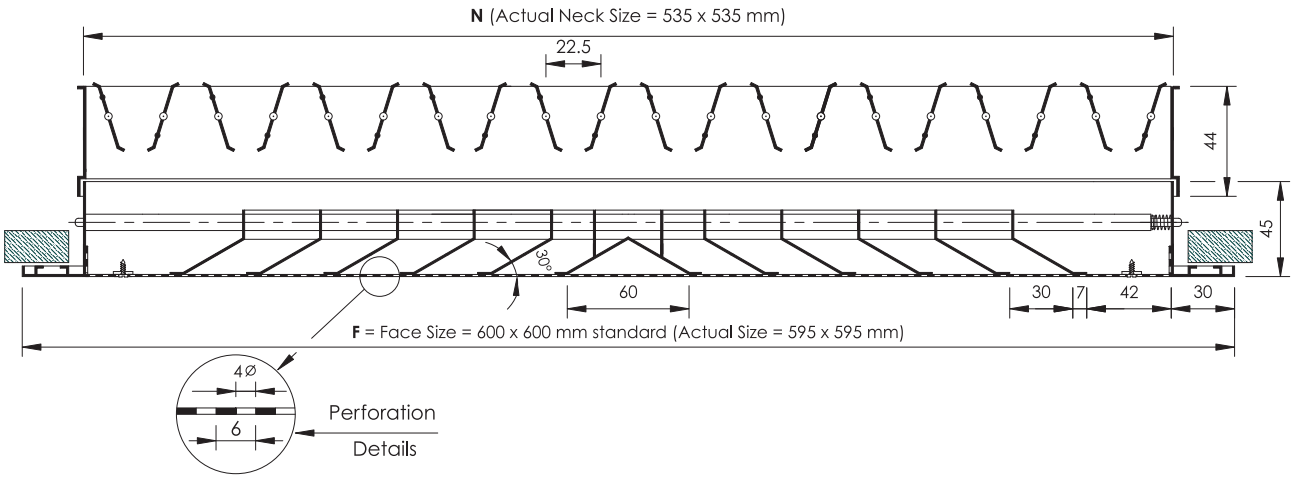

- Diffusers called Perforated Supply Ceiling Diffuser and coded as **PSCD 4WS** are always equipped with 4 - Way Square Pattern and Opposed Blade Damper (provided as standard).

Model PRCD W/O CORE , Standard Module 600 x 600 mm Face Size

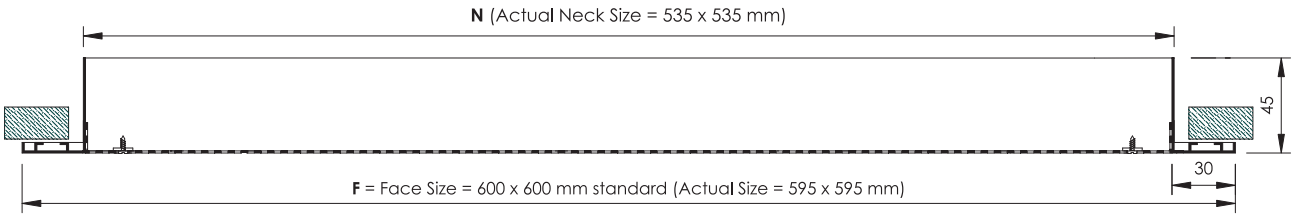

- Unless otherwise specified, Diffusers called Perforated Return, Extract or Exhaust Ceiling Diffuser and coded as **PRCD W/O CORE** are normally supplied w/o inner core and Opposed Blade Damper as standard to ensure straight forward extract application.

Model PRCD 4WS , Standard Module 600 x 600 mm Face Size

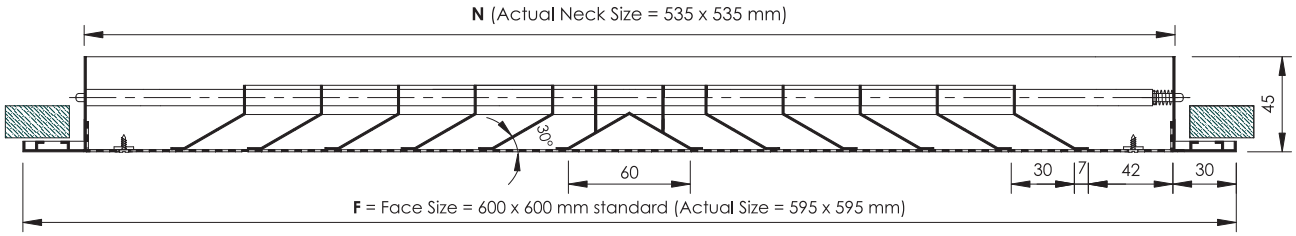

- In some cases, Return, Extract or Exhaust Perforated Ceiling Diffusers are required with inner core (4 way pattern), this will be supplied on request only as an option and coded as **PRCD 4WS**.

- Other sizes and models are available on request.
- All Dimensions are in mm and subject to ±1 mm tolerance.

Diffuser Accessories

A. Opposed Blade Damper

Refer to page No. CD-06, Chapter (1).

B. Equalizing Grid (Optional)

Refer to page No. CD-07, Chapter (1).

C. Foam Type Rubber Gasket (Optional)

Refer to page No. CD-07, Chapter (1).

D. Neck Adaptor (Optional)

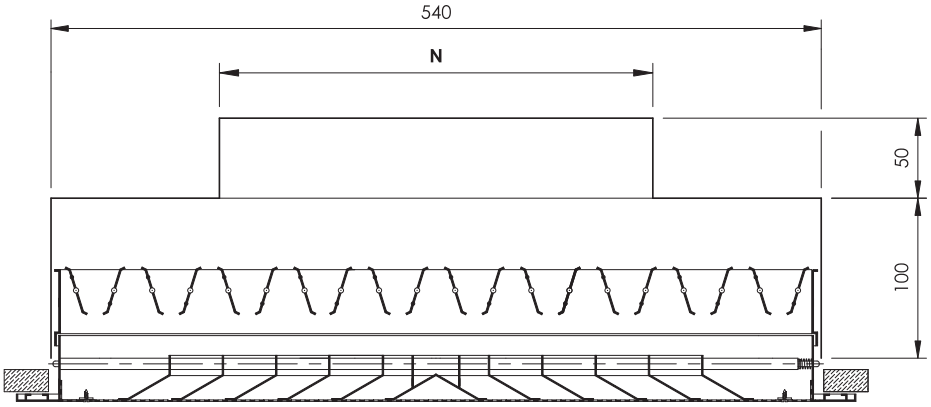

Perforated Diffuser Fixed with Neck Adaptor

- For more details, refer to page No. CD-08, Chapter (1).
- The adaptor neck size "N" to be specified by customar according to ducting system.
- Data listed in table No. CD-04, page No. CD-08, Chapter (1) are not valid for Peforated Diffuser.

Cross Sectional Drawing for Frame Profile used in Perforated Diffusers

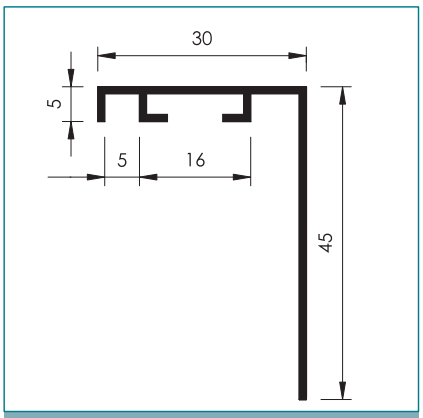

Frame Profile Section

Perforated Ceiling Diffusers

- All Dimensions are in mm and subject to ± 0.2 mm tolerance.

TABLE PD-01

Tabular Selection for Square Perforated Ceiling Diffusers with Neck Adaptor, Model PSCD 4WS Module 600 x 600 mm (Face Size)

No.	Adaptor Neck Size Inch	Adaptor Neck Size mm	Vn m/s / FPM	1.5 / 300	2.0 / 400	2.5 / 500	3.0 / 600	3.5 / 700	4.0 / 800	4.5 / 900
1	6" x 6"	150 x 150	L/S (CFM)	34 (73)	46 (97)	57 (121)	69 (145)	80 (170)	91 (194)	103 (218)
			△Pt (Pa)	5	9	14	19	27	35	44
			Th. (m)	0.3-0.9-2.1	0.6-1.5-2.7	1.2-1.8-3.0	1.5-2.1-3.4	1.6-2.4-3.7	1.8-2.7-4.0	2.1-3.0-4.3
			Noise Level	<15	<15	17	23	28	33	37
2	8" x 8"	200 x 200	L/S (CFM)	61 (129)	81 (172)	102 (215)	122 (258)	142 (301)	163 (344)	183 (388)
			△Pt (Pa)	6	10	16	21	30	39	49
			Th. (m)	0.6-1.2-2.4	0.9-1.6-3.0	1.3-2.1-3.7	1.6-2.4-4.0	1.8-2.7-4.3	2.1-3.0-4.6	2.4-3.7-4.0
			Noise Level	<15	<15	21	27	33	36	41
3	10"x10"	250 x 250	L/S (CFM)	95 (202)	127 (269)	159 (336)	191 (404)	222 (471)	254 (538)	286 (606)
			△Pt (Pa)	7	11	17	23	33	42	53
			Th. (m)	0.7-1.3-2.7	1.0-1.8-3.7	1.5-2.2-4.3	1.8-2.7-4.6	2.1-3.0-4.9	2.4-3.7-5.5	2.7-4.0-5.8
			Noise Level	<15	17	24	31	35	39	43
4	12"x12"	300 x 300	L/S (CFM)	137 (291)	183 (388)	229 (484)	274 (581)	320 (678)	366 (775)	411 (872)
			△Pt (Pa)	8	12	18	25	35	45	56
			Th. (m)	0.8-1.5-3.0	1.2-1.9-4.0	1.6-2.4-4.6	1.9-3.0-5.2	2.3-3.4-5.5	2.7-4.0-6.1	3.0-4.3-6.4
			Noise Level	<15	19	27	33	38	42	47
5	15"x15"	375 x 375	L/S (CFM)	214 (454)	286 (605)	357 (757)	429 (908)	500 (1059)	571 (1211)	643 (1362)
			△Pt (Pa)	9	13	19	28	38	48	59
			Th. (m)	0.9-1.7-3.3	1.3-2.1-4.2	1.7-2.6-4.9	2.1-3.3-5.6	2.5-3.7-5.8	3.0-4.3-6.4	3.3-4.6-6.7
			Noise Level	16	21	30	35	40	44	50
6	18"x18"	450 x 450	L/S (CFM)	309 (654)	411 (872)	504 (1090)	617 (1308)	720 (1526)	823 (1744)	926 (1962)
			△Pt (Pa)	10	14	20	30	42	52	62
			Th. (m)	1.0-1.9-3.6	1.4-2.2-4.5	1.9-2.8-5.2	2.4-3.6-5.9	2.7-4.0-6.1	3.3-4.6-6.7	3.6-4.9-7.0
			Noise Level	17	23	33	37	43	55	65
7	6" Ø	150 Ø	L/S (CFM)	27 (57)	36 (76)	45 (95)	54 (114)	63 (133)	72 (152)	80 (171)
			△Pt (Pa)	5	8	13	18	26	34	42
			Th. (m)	0.3-0.9-2.1	0.6-1.2-2.7	1.2-1.8-3.0	1.3-2.1-3.1	1.5-2.4-3.4	1.8-2.7-3.7	2.1-2.8-4.0
			Noise Level	<15	<15	<15	20	27	31	35
8	8" Ø	200 Ø	L/S (CFM)	48 (101)	64 (135)	80 (169)	96 (203)	112 (237)	128 (270)	144 (304)
			△Pt (Pa)	6	9	15	20	29	37	47
			Th. (m)	0.4-1.0-2.2	0.9-1.5-3.0	1.2-1.8-3.4	1.5-2.1-3.7	1.8-2.7-4.0	2.1-3.0-4.3	2.2-3.4-4.6
			Noise Level	<15	<15	19	26	31	34	38
9	10" Ø	250 Ø	L/S (CFM)	75 (158)	100 (211)	124 (264)	149 (316)	174 (369)	199 (422)	224 (475)
			△Pt (Pa)	7	10	16	22	31	40	50
			Th. (m)	0.6-1.2-2.4	0.9-1.5-3.4	1.5-2.1-4.0	1.6-2.4-4.3	1.8-3.0-4.6	2.1-3.4-4.9	2.4-3.7-5.2
			Noise Level	<15	<15	22	28	33	38	41
10	12" Ø	300 Ø	L/S (CFM)	108 (228)	143 (304)	179 (380)	215 (456)	251 (532)	287 (608)	323 (684)
			△Pt (Pa)	8	11	17	24	33	43	54
			Th. (m)	0.7-1.3-2.7	1.1-1.8-3.7	1.5-2.4-4.2	1.8-2.7-4.9	2.1-3.4-5.2	2.4-3.7-4.3	2.7-4.3-5.8
			Noise Level	<15	17	25	31	36	40	44
11	14" Ø	350 Ø	L/S (CFM)	146 (310)	195 (413)	244 (517)	293 (620)	341 (723)	390 (827)	439 (930)
			△Pt (Pa)	9	12	18	25	35	46	57
			Th. (m)	0.8-1.5-3.0	1.2-2.1-4.0	1.6-.2.5-4.9	2.1-3.0-5.2	2.4-3.5-5.8	2.7-4.0-6.1	3.0-4.6-6.4
			Noise Level	<15	19	27	33	38	42	46
12	16" Ø	400 Ø	L/S (CFM)	191 (406)	255 (541)	319 (676)	383 (811)	447 (946)	510 (1082)	574 (1217)
			△Pt (Pa)	10	13	19	26	37	48	60
			Th. (m)	0.9-1.6-3.1	1.5-2.1-4.3	1.8-2.7-5.2	2.1-3.2-5.8	2.4-3.7-6.1	2.8-4.3-6.7	3.3-4.9-7.0
			Noise Level	<15	21	29	35	40	44	48
13	–	535 x 535 (without Adaptor)	L/S (CFM)	436 (924)	581 (1232)	726 (1539)	872 (1847)	1017 (2155)	1162 (2463)	1308 (2771)
			△Pt (Pa)	15	17	23	35	47	57	68
			Th. (m)	1.9-2.8-5.2	2.4-3.6-5.9	2.7-4.0-6.1	3.3-4.6-6.7	3.6-4.9-7.0	3.7-5.1-7.1	4.0-5.3-7.3
			Noise Level	22	28	38	44	51	62	73

- Damper at full open position
- Noise Level values are based on 10 dB attenuation.
- All listed sizes as above except No. (13) are equipped with Neck Adaptor giving the listed neck size.

Ordering Data

- **Available Surface Finishes For Perforated Ceiling Diffusers :**
  - Powder Coating (Standard Colors are white RAL 9010/ 9016, other optional colors if required to be provided in RAL - No. only and charged extra).
  - Aluminium in Mill Finish.
  - Other Special Finishes (on request if available).

- **Available Surface Finishes For Opposed Blade Damper :**
  - Aluminium in Mill Finish (standard).
  - Matt Black Powder Coating (optional).

- **Ordering Specifications :**

Specify :

1 . Perforated Ceiling Diffuser Description / Model (Supply or Return).
2 . Inner Core Arrangement if any (4, 3, 2 or 1 Way).
3 . Inner Core shape (Square or Rectangular).
4 . Opposed Blade Damper Surface Finish (only mention if required in Black color).
5 . Face Size (F) for the 600 x 600 mm Standard Module (other non-standard sizes are available on request and to be ordered also by face size).
6 . Neck Adaptor Size if any.
7 . Quantity.
8 . Perforated Diffuser Surface Finish.
9 . RAL – No. (only mention if powder coating surface finish is required).
10 . Optional Accessories (Equalizing Grid, Gasket, Adaptor,..... or others).

Example 1 :

1	2	3	4	5	6	7	8	9	10
PSCD	4W	S	–	24" x 24" 600 x 600 (mm)	–	3	Powder Coating	9016	–

Example 2 :

1	2	3	4	5	6	7	8	9	10
PSCD	4W	S	BD	24" x 24" 600 x 600 (mm)	10" Ø 250 mm Ø	10	Powder Coating	9010	With Neck Adaptor

Example 3 :

1	2	3	4	5	6	7	8	9	10
PRCD	–	–	–	24" x 24" 600 x 600 (mm)	–	5	Powder Coating	7045 (Optional)	–

Example 4 :

1	2	3	4	5	6	7	8	9	10
PRCD	4W	S	–	12" x 12" 300 x 300 (mm)	–	15	Mill Finish	–	With Rubber Gasket

BEST CHOICE INDUSTRIES L.L.C.

MANUFACTURING CENTRAL AIR CONDITIONING AIR OUTLETS

Tel. : 04 - 88 55 422, Fax : 04 - 88 55 421, P.O. Box: 31567, Dubai - U. A. E. - E-mail: bcillc@emirates.net.ae

CHAPTER 6

DOOR TRANSFER GRILLES

CHAPTER-6

DOOR TRANSFER GRILLES

DOOR TRANSFER GRILLES

BCI Door Transfer Grilles of the DG Model are particularly designed to allow the passage of air from a conditioned space to another while preventing vision. They are widely used, not only in doors, panels or partitions, but also in places of conventional exhaust and return air grilles where it's required that the interior of the duct be hidden.

Features & Characteristics :

- Construction : Frame & blades are made of high quality Extruded Aluminium Profiles of 6063 Alloy.
- Frame Flange width : 30 mm.
- Blades : Inverted " **V** " horizontal cross section louvers arranged to overlap each other to be " Sight – Tight " when viewed from any angle.
- Blades pitch : blades are spaced at a distance of 20 mm.
- The inverted " **V** " louver cross section not only blocks vision, but also provides additional strength and rigid construction.
- Available in wide variety of standard neck sizes ranging from 200 x 100 up to 1200 x 500 mm (other None – Standard Sizes are available on request).
- Telescopic frame suitable for doors or partitions from 25 – 55 mm thick (Fixed on both sides of the door).
- The frame of the Door Transfer Grille is composed of two parts, one part is the fixed one, holding the core and can be fixed to one side of the door or partition. While the other part, the sliding one, is fixed to the other side of the door or partition. Thus the sliding frame gives the facility of installing this grille to different thicknesses of doors or partitions.
- The large free area (up to 70 %) is capable of transferring high air volumes at minimum pressure loss and noise level.
- The frame mounting holes are dimpled, allowing for a counter-sunk fastener head appearance.
- Available with Foam type Rubber Gasket for air sealing (provided as an option).
- Mounting instructions : see page No. DG – 03.
- Surface Finishes : see page No. DG – 05.

Construction and Dimensional Details

Model DG

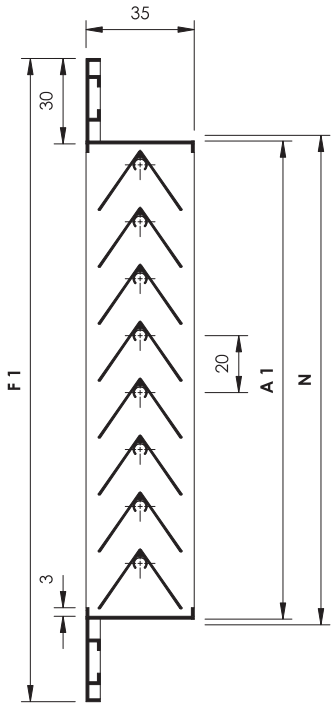

Fixed Frame

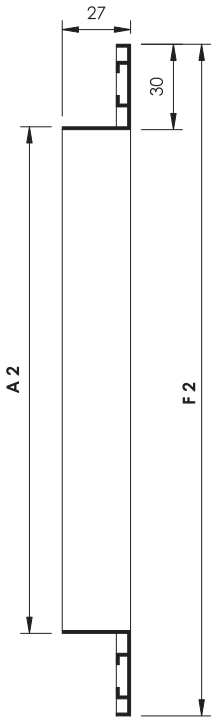

Sliding Frame

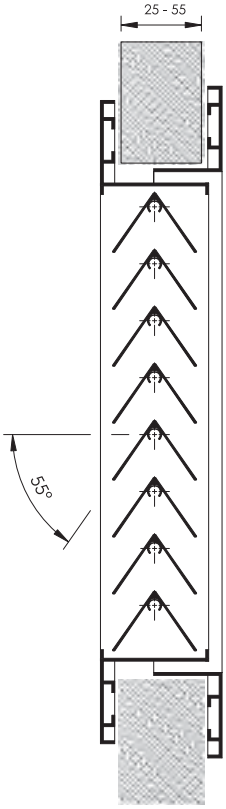

Door Grille

N : Nominal / Listed Size = Length (L) x Height (H) in mm
Case I: Specified height (H) in cm is even figure :
A 1 = Actual Size = (L-10) x (H-15)
F 1 = Face Size = (L+50) x (H+45)
A 2 = Actual Size = (L-5) x (H-10)
F 2 = Face Size = (L+55) x (H+50)

Case II: Specified height (H) in cm is even figure :
A 1 = Actual Size = (L-10) x (H-5)
F 1 = Face Size = (L+50) x (H+55)
A 2 = Actual Size = (L-5) x (H)
F 2 = Face Size = (L+55) x (H+60)

Cross Sectional Drawings for Profiles used in Door Transfer Grilles

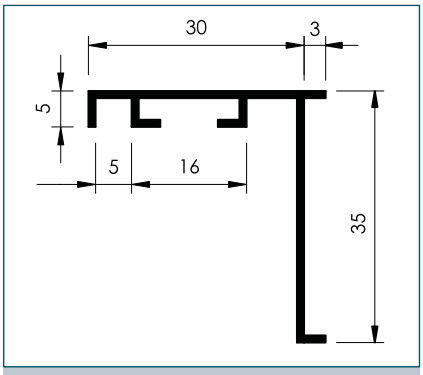

Frame Profile Section
Fixed Frame

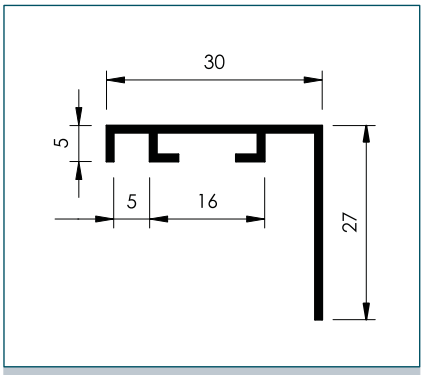

Frame Profile Section
Sliding Frame

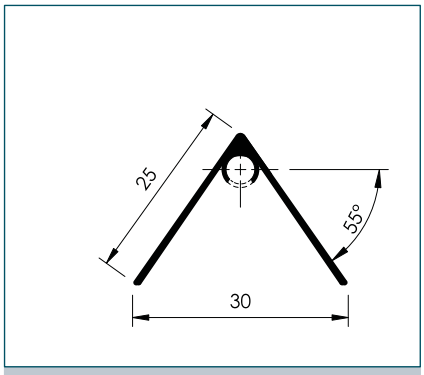

Inverted " **V** " Blade Profile Section
Door Grilles

- All Dimensions are in mm and subject to ± 0.2 mm tolerance.

Mounting Instructions

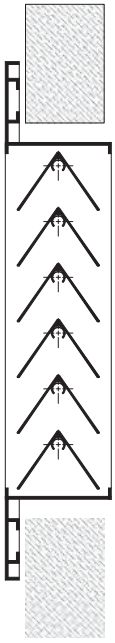

Step 1

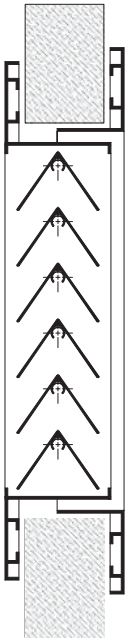

Step 2

- Insert the counterframe in the door partion opening and fix with screws using the holes on the border edge.
- On the opposite part, install the grille with frame in away that allows the telescopic part to open into the counterframe. Fix with screws.

Face Screw Fixing

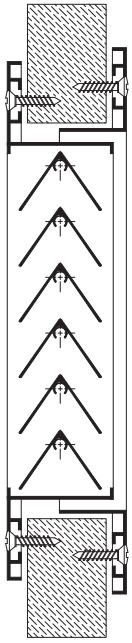

- The Door Grille is fixed to the door or partition by means of visible counter - sunk screws.

TABLE DG - 01

Effective Area Values for Door Transfer Grilles in (m^2)

L ▼ H ▶	100	150	200	250	300	400	500
150	0.005	0.008					
200	0.010	0.018	0.027				
250	0.014	0.025	0.040	0.045			
300	0.016	0.029	0.043	0.057	0.070		
400	0.021	0.039	0.056	0.073	0.090	0.120	
500	0.027	0.050	0.070	0.095	0.120	0.150	0.190
600	0.033	0.060	0.090	0.120	0.150	0.190	0.260
800	0.043	0.080	0.120	0.155	0.190	0.260	0.320
1000	0.056	0.100	0.150	0.190	0.230	0.320	0.400
1200	0.070	0.120	0.190	0.225	0.260	0.400	0.520

- L & H Dimensions are in mm.

Engineering and Performance Data

Selection Diagrams

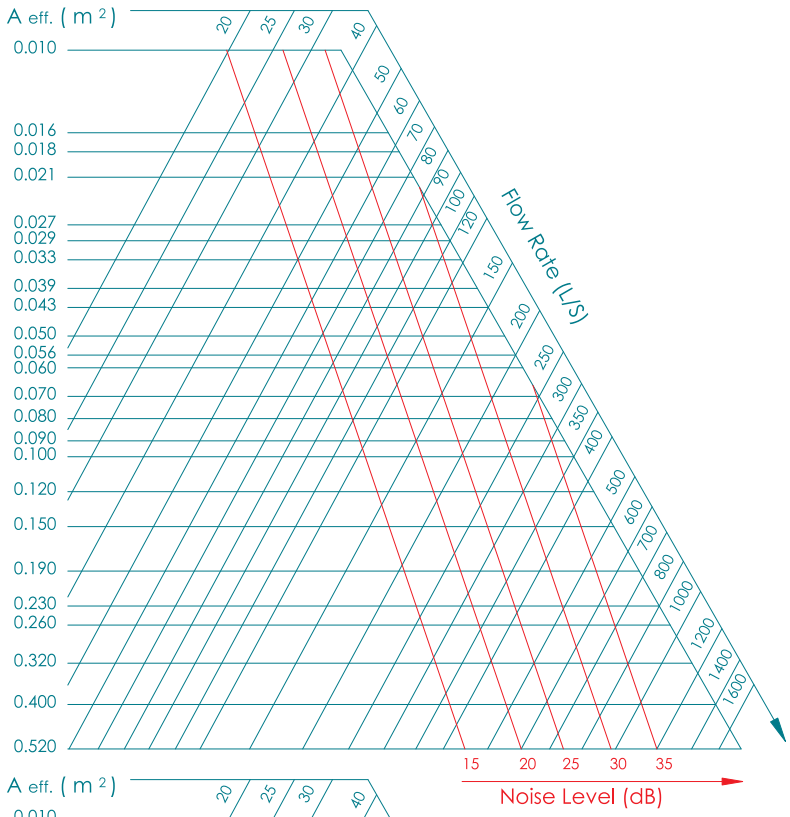

Illustrative Example :
Given Data :
Nominal Size : 400 x 200 mm
Air Flow Rate = 255 CFM = 120 (L/S)
$A_{eff.}$ = 0.056 m^2 (refer to table No. DG - 01).
Apply the readings of flow rate and Aeff. on the chart and read other data as below :
Noise Level = 24 dB.
$V_{eff.}$ = 2.2 m/s.
Pressure Drop = 21 pa.

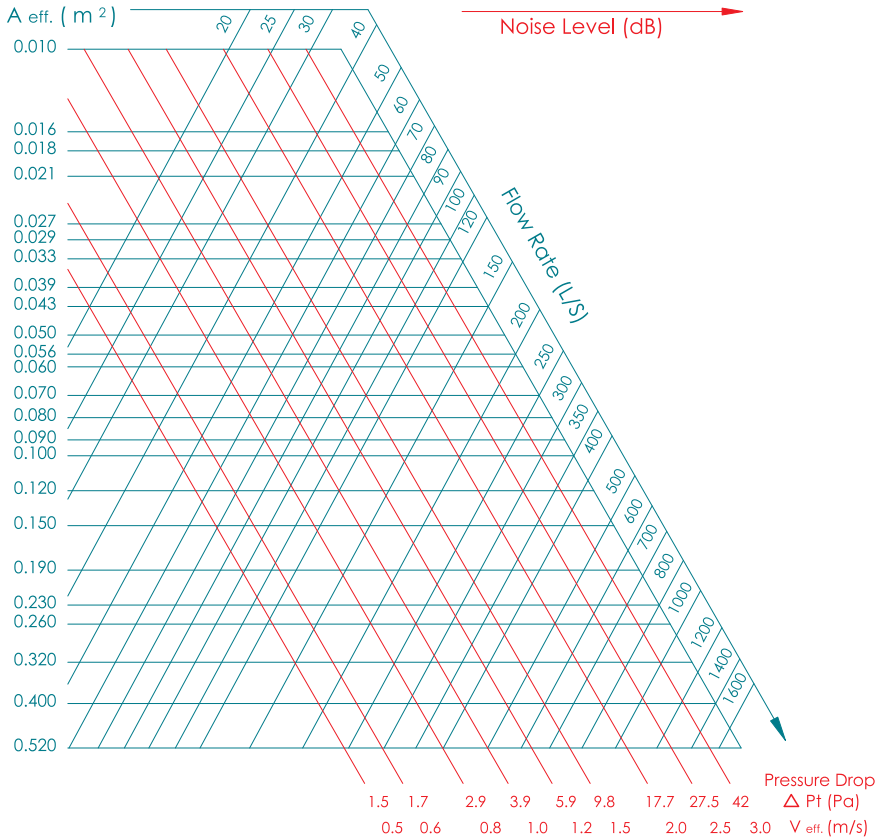

Ordering Data

- **Available Surface Finishes For Door Transfer Grilles :**
  - Natural / Matt Silver Anodized .
  - Powder Coating (Standard Colors are white RAL 9010/9016, other optional colors if required to be provided in RAL - No. only and charged extra).
  - Aluminum in Mill Finish.
  - Other Special Finishes (on request if available).

- **Ordering Specifications :**

Specify :

1 . Door Grille Description / Model (DG).
2 . Nominal / Neck size.
3 . Quantity.
4 . Door Grille Surface Finish.
5 . RAL – No.(only mention if powder coating surface finish is required).
6 . Rubber Gasket (only mention if required).

Example 1 :

1	2	3	4	5	6
DG	12" x 8" 300 x 200 (mm)	25	Powder Coating	9016	–

Example 2 :

1	2	3	4	5	6
DG	20" x 10" 500 x 250 (mm)	40	Silver Anodized	–	With Rubber Gasket

Example 3 :

1	2	3	4	5	6
DG	16" x 12" 400 x 300 (mm)	6	Mill Finish	–	–

BEST CHOICE INDUSTRIES L.L.C.

MANUFACTURING CENTRAL AIR CONDITIONING AIR OUTLETS

Tel. : 04 - 88 55 422, Fax : 04 - 88 55 421, P.O. Box: 31567, Dubai - U. A. E. - E-mail: bcillc@emirates.net.ae

CHAPTER 7

EXHAUST AND FRESH AIR LOUVERS

CHAPTER-7

EXHAUST AND FRESH AIR LOUVERS

EXHAUST AND FRESH AIR LOUVERS

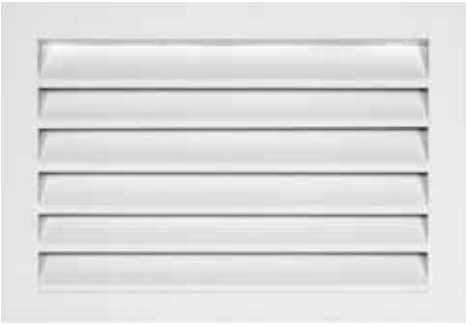

The Aluminium Exhaust and Fresh Air Louvers of **BCI** are used both internally and externally in buildings for the extraction of re – cycled air, intake of external fresh air of the expulsion of contaminated air. The quality of the material used and the particular inclination of the blades at 60° angle downward offer a weather resistant Louvers which gives good protection against the direct ingress of rain water, leaves and birds. Can also be used directly installed on walls for the ventilation of industrial areas. Also suitable for the use with an adjustable or overpressure damper for air flow and pressure control.

Features & Characteristics :

- Construction : Frame & blades are made of high quality Extruded Aluminium Profiles of 6063 Alloy.
- Frame Flange width : 30 mm.
- Blades : Fixed Louverd type arranged horizontally and inclined downward to 60 ° angle in order to :
  - prevent the ingress of rain water.
  - Prevent the ingress of light.
  - Block vision while straight viewing.
  - Be suitable for external walls and screening applications.
- The blades are positioned on 25 mm minimum centers up to 35 mm maximum centers resulting in a high free area to provide minimum resistance to air flow.
- Available in wide variety of neck sizes with 100 x 100 mm minimum single section size and 2 mtr maximum single section height. Louvers height exceeding 2 mtr to be fabricated and supplied in multiple sections depending on length and height dimensions as well as site conditions.

- The assembly of multiple sections is unlimited, where each section operates independently.
- Multiple sections : Supplied as separate sections and assembly by others on site.
- The Fresh Air Louver is suitable for the use in air inlet of fresh air ducts and air handling units. It's also suitable for the use at dirty air exhaust discharge.
- Wire Mesh screen of galvanized steel is attached to the interior face of the louver as an option, mesh size 3 x 3 mm.
- Exhaust Air Louvers are available with different type of attachments such as :
  - Opposed Blade Damper (Model EAL + D).
  - Aluminium Filter (Model FAL c/w Filter).
  - Both the Damper and Filter (Model FAL + D c/w Filter).
- Available with Foam type Rubber Gasket for air sealing (provided as an option).
- Mounting instructions : see page No. EL-04
- Surface Finishes : see page No. EL-08.

Exhaust Air Louvers
Construction and Dimensional Details

Model EAL

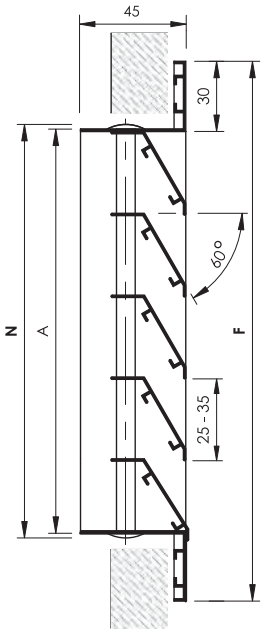

- Wire Mesh (optional).

Model EAL + D (Double Frame)

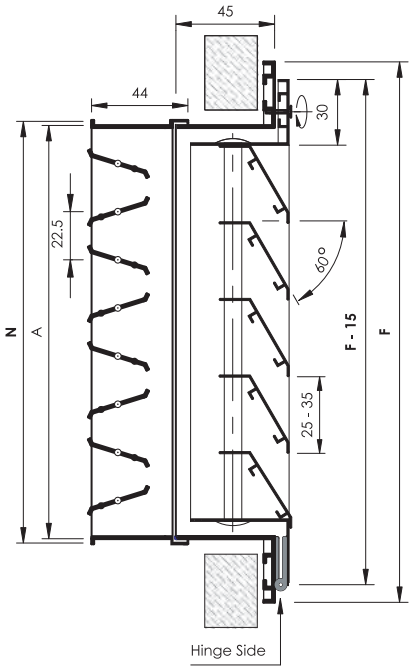

- Wire Mesh (optinal).
- For Opposed Blade Damper details and construction refer to chapter (1) or (2).
- Double Frame Louvers are provided with door hinge from one side and screw from other side allowing the second frame (inner one) to act as an access door to the Opposed Blade Damper.

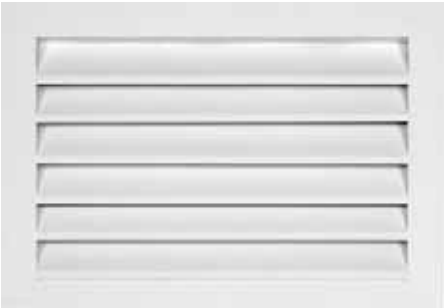

N : Nominal/Listed Size = Length (L) x Height (H)
A : Actual Size = (L-10) x (H-10)
F : Face Size = (L+50) x (H+50)

- Exhaust Air Louvers furnished approximately 10 mm less than the Nominal/Listed Size.
- All Dimensions are in mm and subject to ±1 mm tolerance.

Fresh Air Louvers
Construction and Dimensional Details

Model EAL FAL c/w Filter

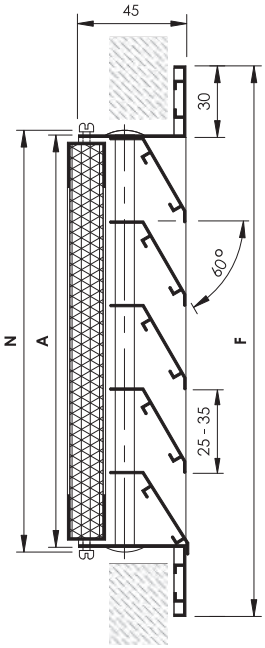

- Wire Mesh (optional).
- Filter : Aluminium Washable Filter Media of 1/2 " standard thickness (1" & 2 " thicknesses also available on request as an option).

Model FAL + D c/w Filter (Double Frame)

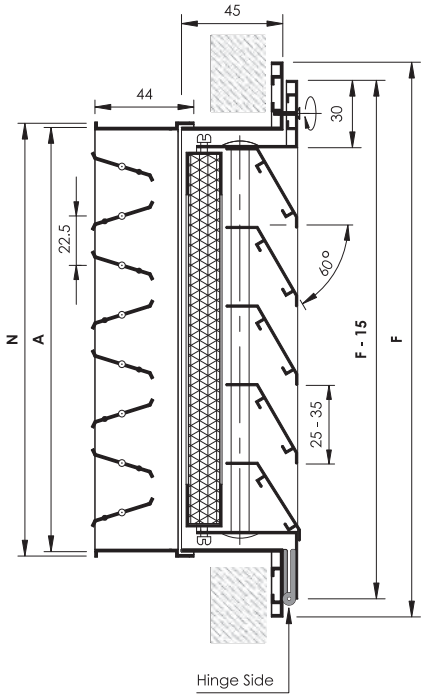

- Wire Mesh (optinal).
- For Opposed Blade Damper details and construction refer to chapter (1) or (2).
- Filter : Aluminium Washable Filter Media of 1/2 " standard thickness (1" & 2 " thicknesses also available on request as an option).
- Double Frame Louvers are provided with door hinge from one side and screw from other side allowing the second frame (inner one) to act as an access door to the Filter and / or Opposed Blade Damper.

N : Nominal/Listed Size = Length (L) x Height (H)
A : Actual Size = (L-10) x (H-10)
F : Face Size = (L+50) x (H+50)

- Exhaust Air Louvers furnished approximately 10 mm less than the Nominal/Listed Size.
- All Dimensions are in mm and subject to ±1 mm tolerance.

Cross Sectional Drawings for Profiles used in Exhaust and Fresh Air Louvers

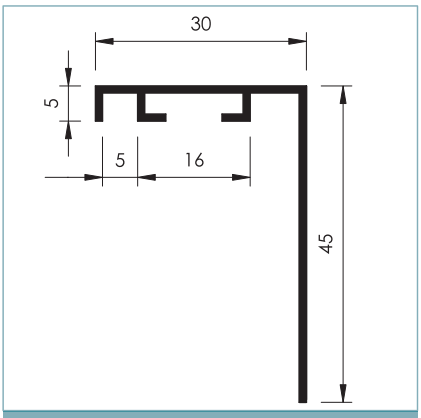

Frame Profile Section

Exhaust and Frash Air Louvers

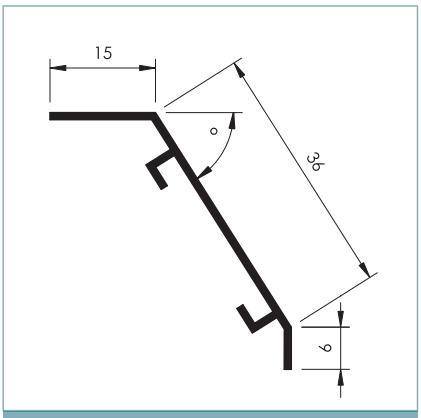

Louver Blade Profile Section

Exhaust and Fresh Air Louvers

- All Dimensions are in mm and subject to ± 0.2 mm tolerance.

Available Fixing Mounting

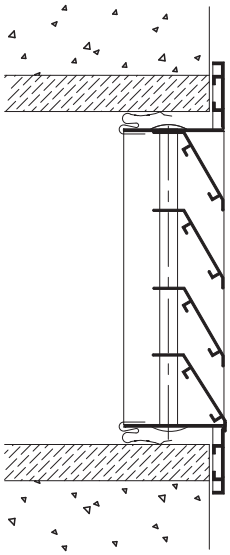

A. Concealed Fixing (Spring Clip Mounting)

The Louver is fixed by means of spring clips to the wall or partition where no screws are visible.

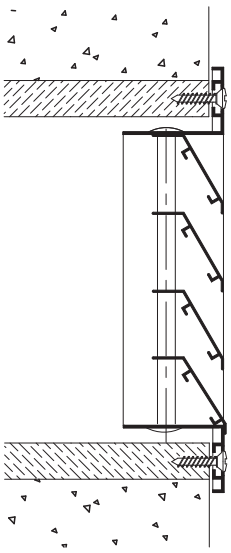

B. Face Screw Fixing

The Louver is fixed to the wooden frame by means of visible screws.

- Note : For details of multiple sections consult **BCI**.

Engineering and Performance Data

EFFECTIVE AREA VALUES FOR EXHUAST AND FRESH AIR LOUVERS IN (m ²)

TABLE EL-01

L ↓ H ▸	100	150	200	250	300	350	400	450	500	550	600
100	0.004										
150	0.006	0.009									
200	0.008	0.012	0.016								
250	0.010	0.015	0.021	0.026							
300	0.012	0.018	0.025	0.031	0.037						
350	0.016	0.024	0.032	0.039	0.047	0.055					
400	0.018	0.027	0.036	0.045	0.054	0.063	0.072				
450	0.020	0.030	0.041	0.051	0.061	0.071	0.081	0.091			
500	0.025	0.038	0.050	0.063	0.075	0.088	0.100	0.113	0.125		
550	0.028	0.041	0.055	0.069	0.083	0.096	0.110	0.124	0.138	0.151	
600	0.033	0.050	0.066	0.083	0.099	0.116	0.132	0.149	0.165	0.182	0.198
650	0.036	0.054	0.072	0.089	0.107	0.125	0.143	0.161	0.179	0.197	0.215
700	0.041	0.061	0.081	0.102	0.122	0.142	0.162	0.183	0.203	0.223	0.244
750	0.044	0.065	0.087	0.109	0.131	0.152	0.174	0.196	0.218	0.239	0.261
800	0.048	0.072	0.096	0.120	0.144	0.168	0.192	0.216	0.240	0.264	0.288
850	0.051	0.077	0.102	0.128	0.153	0.179	0.204	0.230	0.255	0.281	0.306
900	0.057	0.085	0.113	0.142	0.170	0.198	0.227	0.255	0.284	0.312	0.340
950	0.060	0.090	0.120	0.150	0.180	0.209	0.239	0.269	0.299	0.329	0.359
1000	0.065	0.098	0.130	0.163	0.195	0.2289	0.260	0.293	0.325	0.358	0.390
1050	0.068	0.102	0.137	0.171	0.205	0.239	0.273	0.307	0.341	0.375	0.410
1100	0.068	0.107	0.143	0.179	0.215	0.250	0.286	0.322	0.358	0.393	0.429
1150	0.075	0.112	0.150	0.187	0.224	0.262	0.299	0.336	0.374	0.411	0.449
1200	0.078	0.117	0.156	0.195	0.234	0.273	0.312	0.35	0.390	0.429	0.468

TABLE EL-02

L ↓ H ▸	650	700	750	800	850	900	950	1000	1050	1100	1150	1200
650	0.232											
700	0.264	0.284										
750	0.283	0.305	0.326									
800	0.312	0.336	0.360	0.384								
850	0.332	0.357	0.383	0.408	0.434							
900	0.369	0.397	0.425	0.454	0.482	0.510						
950	0.389	0.419	0.449	0.479	0.509	0.539	0.569					
1000	0.423	0.455	0.488	0.520	0.553	0.585	0.618	0.650				
1050	0.444	0.478	0.512	0.546	0.580	0.614	0.648	0.683	0.717			
1100	0.465	0.501	0.536	0.572	0.608	0.644	0.679	0.715	0.751	0.787		
1150	0.486	0.523	0.561	0.635	0.635	0.673	0.710	0.748	0.785	0.822	0.860	
1200	0.507	0.546	0.585	0.624	0.663	0.702	0.741	0.780	0.819	0.858	0.897	0.936

- L & H Dimensions are in mm.
- Damper at full open position (if any).

Engineering and Performance Data

Tabular Selection for Exhaust and Fresh Air Louvers

TABLE EL-03

Vf. m/s (FPM)		1.0 (200)	1.5 (300)	2.0 (400)	2.5 (500)	3.0 (600)	3.5 (700)	4.0 (800)
△ Pt Pa (Inwg)		3.0 (0.01)	8.0 (0.03)	14 (0.05)	24 (0.09)	39 (0.15)	59 (0.23)	90 (0.35)
Flow Rate (L/S)	cfm	A eff. (m ²)						
(12)	25	0.012	0.008	0.006	0.005	0.004	0.003	0.002
(24)	50	0.023	0.015	0.012	0.009	0.008	0.007	0.006
(47)	100	0.046	0.031	0.023	0.019	0.015	0.013	0.012
(71)	150	0.070	0.046	0.035	0.028	0.023	0.020	0.017
(94)	200	0.093	0.062	0.046	0.037	0.031	0.027	0.023
(118)	250	0.116	0.077	0.058	0.046	0.039	0.033	0.029
(142)	300	0.139	0.093	0.070	0.056	0.046	0.040	0.035
(165)	350	0.163	0.108	0.081	0.065	0.054	0.046	0.041
(189)	400	0.186	0.124	0.093	0.074	0.062	0.053	0.046
(212)	450	0.209	0.139	0.105	0.084	0.070	0.060	0.052
(236)	500	0.232	0.155	0.116	0.093	0.077	0.066	0.058
(260)	550	0.255	0.170	0.128	0.102	0.085	0.073	0.064
(283)	600	0.279	0.186	0.139	0.111	0.093	0.080	0.070
(307)	650	0.302	0.201	0.151	0.121	0.101	0.086	0.075
(330)	700	0.325	0.217	0.163	0.130	0.108	0.093	0.081
(354)	750	0.348	0.232	0.174	0.139	0.116	0.100	0.087
(378)	800	0.372	0.248	0.186	0.149	0.124	0.106	0.093
(401)	850	0.395	0.263	0.197	0.158	0.132	0.113	0.099
(425)	900	0.418	0.279	0.209	0.167	0.139	0.119	0.105
(448)	950	0.441	0.294	0.221	0.177	0.147	0.126	0.110
(472)	1000	0.465	0.310	0.232	0.186	0.155	0.133	0.116
(496)	1050	0.488	0.325	0.244	0.195	0.163	0.139	0.122
(519)	1100	0.511	0.341	0.255	0.204	0.170	0.146	0.128
(543)	1150	0.534	0.356	0.267	0.214	0.178	0.153	0.134
(566)	1200	0.557	0.372	0.279	0.223	0.186	0.159	0.139
(590)	1250	0.581	0.387	0.290	0.232	0.194	0.166	0.145
(613)	1300	0.604	0.403	0.302	0.242	0.201	0.173	0.151
(637)	1350	0.627	0.418	0.314	0.251	0.209	0.179	0.157
(661)	1400	0.650	0.434	0.325	0.260	0.217	0.186	0.163
(684)	1450	0.674	0.449	0.337	0.269	0.225	0.192	0.168
(708)	1500	0.697	0.465	0.348	0.279	0.232	0.199	0.174
(731)	1550	0.720	0.480	0.360	0.288	0.240	0.206	0.180
(755)	1600	0.743	0.495	0.372	0.297	0.248	0.212	0.186
(779)	1650	0.766	0.511	0.383	0.307	0.255	0.219	0.192
(802)	1700	0.790	0.526	0.395	0.316	0.263	0.226	0.197
(826)	1750	0.813	0.542	0.406	0.325	0.271	0.232	0.203
(849)	1800	0.836	0.557	0.418	0.334	0.279	0.239	0.209
(873)	1850	0.859	0.573	0.430	0.344	0.286	0.246	0.215
(897)	1900	0.883	0.588	0.441	0.353	0.294	0.252	0.221
(920)	1950	0.906	0.604	0.453	0.362	0.302	0.259	0.226
(944)	2000	0.929	0.619	0.465	0.372	0.310	0.265	0.232

• Damper at full open position (if any).

Engineering and Performance Data

Air Flow Resistance Diagram (All Models)
Pressure Drop (△ Pt) versus Face Velocity (Vf)

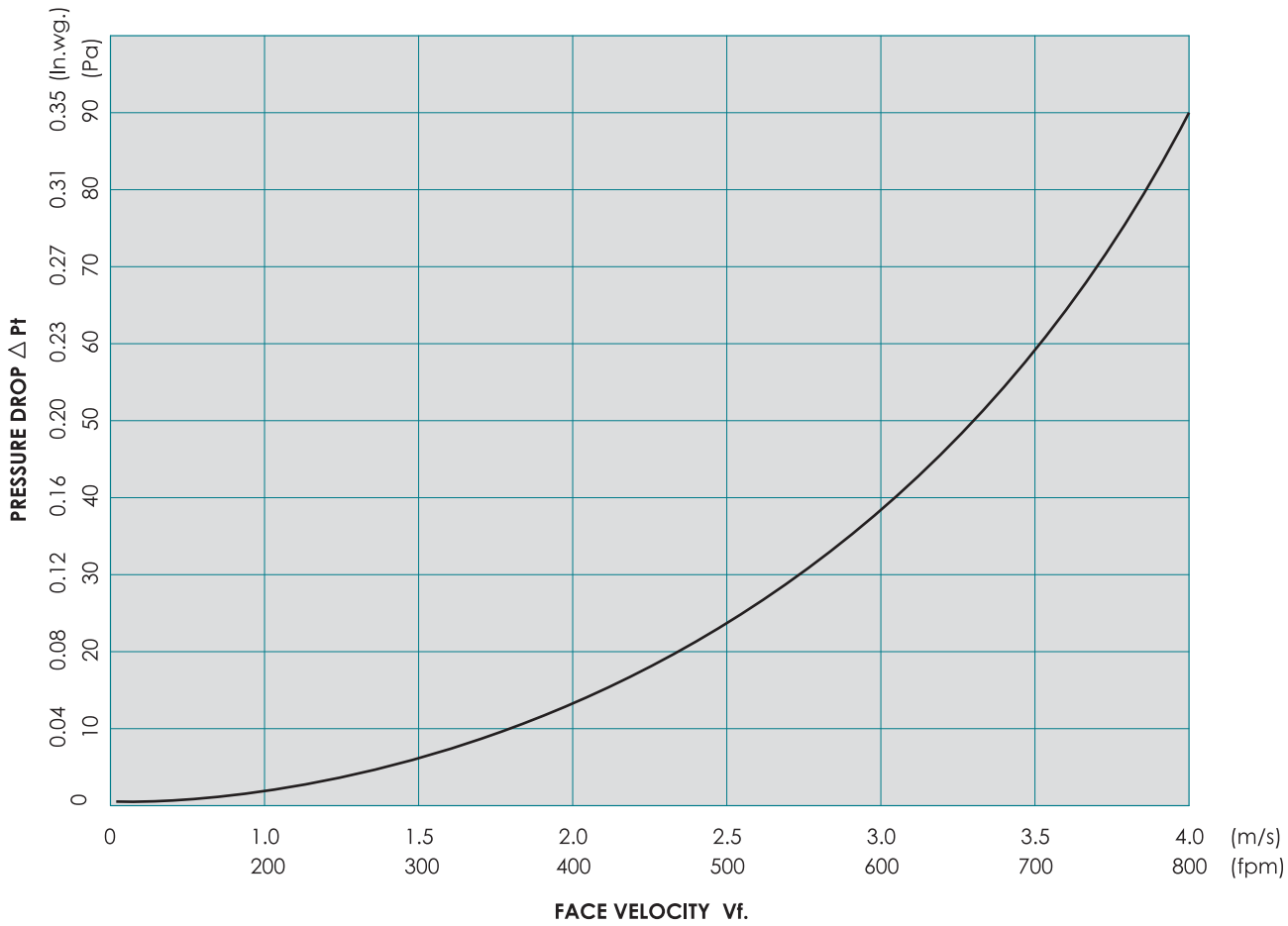

Selection Procedure

Case I :

Illustrative Example :

Given Data : Required Model : EAL
Air Flow Rate : 650 CFM (307 L/S)

Assume V f. not exceeding 1.5 m/s (300 FPM).
Refer to page No. EL-06 Table EL-03, @ 650 CFM and V f. = 1.5 m/s to read the related data as below :

Pressure Drop = 8.0 Pa (0.03 Inwg)
A eff. = 0.201 m ²

By applying the A eff. value to table No. EL-01, simply you can select the size of 700 x 500 mm which is having the nearest area value to the required one.

Case II :

Illustrative Example :

Given Data : Required Model : FAL c/w Filter
Air Flow Rate : 3500 CFM (1652 L/S)

Assume V f. not exceeding 1.5 m/s (300 FPM).
Since the CFM given is out of the range of Table No. EL-03 divide the (3500) by (2) to give 1750 CFM and read the related data at this value as below :

Pressure Drop = 8.0 Pa (0.03 Inwg)
A eff. = 0.542 m ²

By applying the A eff. value to table No. EL-02, simply you can select the size of 950 x 900 mm which is having the nearest area value to the required one.
Now, to obtain the required 3500 CFM , double the area while maintaining the same height as below :
(L x 2) x (H) = (950 x 2) x (900) mm
Final size = 1900 x 900 mm.

Ordering Data

- **Available Surface Finishes For Exhaust And Fresh Air Louvers :**
  - Natural / Matt Silver Anodized .
  - Powder Coating (Standard Colors are white RAL 9010 / 9016, other optional colors if required to be provided in RAL - No. only and charged extra).
  - Aluminium in Mill Finish.
  - Other Special Finishes (on request if available).

- **Available Surface Finishes For Opposed Blade Damper :**
  - Aluminium in Mill Finish (standard).
  - Matt Black Powder Coating (optional).

- **Ordering Specifications :**

Specify :

1 . Louver Description / Model (Exhaust or Fresh, with or w/o Opposed Blade Damper).
2 . Wire Mesh (only mention if required).
3 . Nominal / Neck size.
4 . Quantity.
5 . Exhaust / Fresh Air Louvers Surface Finish.
6 . RAL - No.(only mention if powder coating surface finish is required).
7 . Type of Fixing (Concealed or Face Screw Fixing).
8 . Thickness of Aluminium Filter for Fresh Air Louvers (only mention if optional 1 or 2 " thickness is required).
9 . Rubber Gasket (only mention if required).
10 . Remarks if any.

Example 1 :

1	2	3	4	5	6	7	8	9	10
EAL	+WM	8" x 8" 200 x 200 (mm)	25	Mill	–	Concealed	–	–	–

Example 2 :

1	2	3	4	5	6	7	8	9	10
FAL c/w Filter	–	16" x 10" 400 x 250 (mm)	7	Powder Coating	1013 (Optional)	Screw	–	With Rubber Gasket	–

Example 3 :

1	2	3	4	5	6	7	8	9	10
FAL c/w Filter + D	–	30" x 20" 750 x 500 (mm)	15	Silver Anodized	–	Concealed	2 " (Optional)	–	(Double Frame)

BEST CHOICE INDUSTRIES L.L.C.

MANUFACTURING CENTRAL AIR CONDITIONING AIR OUTLETS

Tel. : 04 - 88 55 422, Fax : 04 - 88 55 421, P.O. Box: 31567, Dubai - U. A. E. - E-mail: bcillc@emirates.net.ae

CHAPTER 8

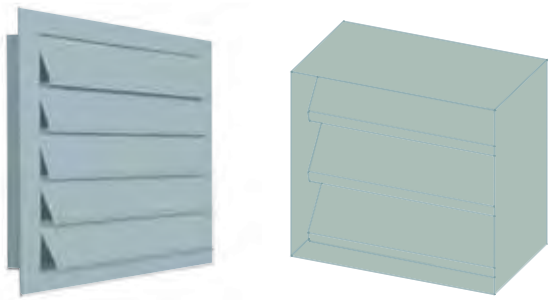

GRAVITY LOUVERS AND NON RETURN DAMPERS

CHAPTER-8

GRAVITY LOUVERS AND NON RETURN DAMPERS

PAGE NO.	CONTENTS

GRAVITY LOUVERS AND NON RETURN DAMPERS

Gravity Louvers **GL** and Non Return Dampers **NRD** are generally used in intake and discharge applications in residential, commercial and industrial ventilated systems. GL's and NRD's guarantee that the automatic opening of the blades will occur when the fan or system is switched on and equally will close when switched off in order to avoid passage of air when the system is closed, i.e preventing the reverse of air flow. They are also used to maintain certain pressure in pressurized treated areas with respect to others, thus only when pressure is exceeding the designed limit, blades will automatically open to discharge or relieve the excessive air.
GL.'s and NRD.'s are also commonly named as "Pressure Relief Dampers", "Over Pressure Dampers", "Back Draft Dampers" or "Gravity Shatters" according to the purpose of their use.

Features & Characteristics

Gravity Louvers (GL) :

- Frame construction : made of high quality Extruded Aluminium Profiles of 6063 Alloy.
- Frame Flange width : 30 mm.
- Blades : fabricated from Aluminium sheet of 0.5 mm thickness.
- Aluminium Blades are fixed to the frame through a galvanized steel rods (axles) for rigid construction.
- Aluminium Blades are fitted with nylon bushes for corrosion resistance, rattle free and smooth operation.
- The blades are positioned on 45 mm minimum centers up to 100 mm maximum centers resulting in a high free area to provide minimum resistance to air flow.
- Available in wide variety of neck sizes with 100 x 100 mm minimum single section size and 2 mtr maximum single section height. Louvers height exceeding 2 mtr to be fabricated and supplied in multiple sections depending on length and height dimensions as well as site conditions.
- The assembly of multiple sections is unlimited where each section operates independently.
- Multiple sections : Supplied as separate sections and assembly by others on site.
- Usually used for external or internal wall mounting installations.

Non Return Dampers (NRD) :

- Casing construction : made of 18 or 20 gauge formed galvanized steel sheet.
- Casing Flange width : 25 - 30 mm (Model NRD – F).
- Blades : fabricated from Aluminium sheet of 0.5 mm thickness in mill finish.
- Aluminium Blades are fixed to the frame through a galvanized steel rods (axles) for rigid construction.
- Aluminium Blades are fitted with nylon bushes for corrosion resistance, rattle free and smooth operation.
- The blades are positioned on 50 mm minimum centers up to 100 mm maximum centers resulting in a high free area to provide minimum resistance to air flow.
- Available in wide variety of neck sizes with 100 x 100 mm minimum single section size and 2 mtr maximum single section height. Louvers height exceeding 2 mtr to be fabricated and supplied in multiple sections depending on length and height dimensions as well as site conditions.
- All joints are welded and sealed for air tight operation and protected by Aluminium spray paint.
- Available in 3 types / models according to casing design. Slip , Clip and Flange type as shown in page No. GL-03.
- Usually used for duct mounting installations.

- Automatically, when the duct pressure is normalized, the blades drop to closed position by gravity effect.
- The specially designed blades have an overlapping lip which assures a tight closure while in closing position.
- Available with Foam type Rubber Gasket for air sealing (provided as an option).
- Mounting instructions : see page No. GL-04.

Gravity Louvers

Construction and Dimensional Details

Model GL

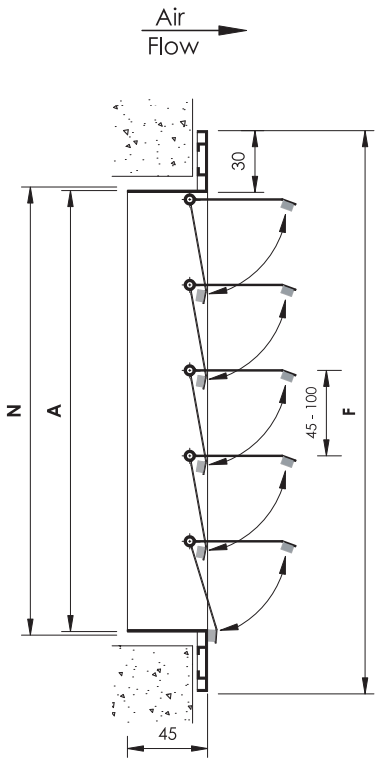

- Mounting : usually used for **External** Wall mounting installations.

Model GL - R (Reversed Blades)

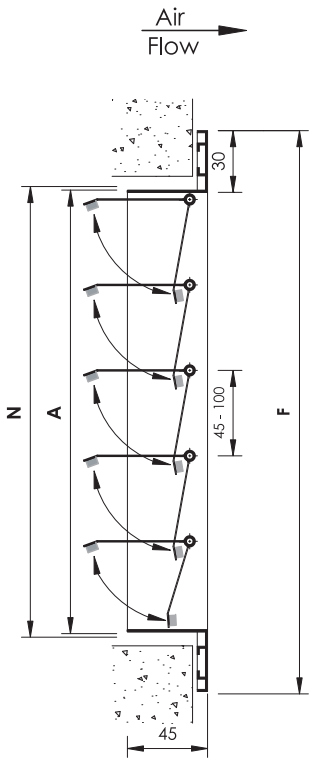

- Mounting : usually used for **Internal** Wall mounting installations with reversed blades as shown above.

N : Nominal/Listed Size = Length (L) x Height (H)
A : Actual Size = (L-10) x (H-10)
F : Face Size = (L+50) x (H+50)

- Blades are sealed at the lower end of each by foam type Rubber Gasket as a standard for air tightness while closure.
- Gravity Louvers furnished approximately 10 mm less than the Nominal/Listed Size.
- All Dimensions are in mm and subject to ±1 mm tolerance.

Non Return Dampers

Construction and Dimensional Details

Model NRD-S

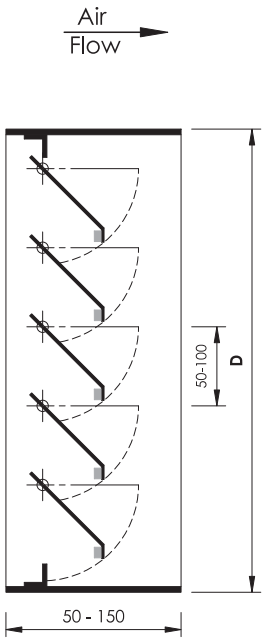

- Mounting : Usually used for duct mounting installations with open ends **(Slip type).**

Model NRD-C

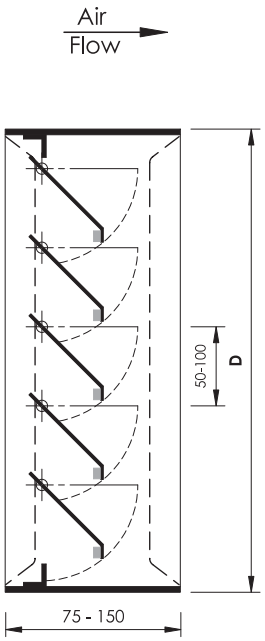

- Mounting : Usually used for duct mounting installations with cleat ends **(Clip type).**

Model NRD-F

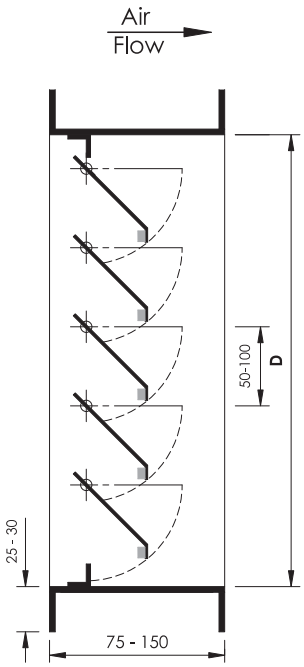

- Mounting : Usually used for duct mounting or recessed installations with flanged ends **(Flange type).**

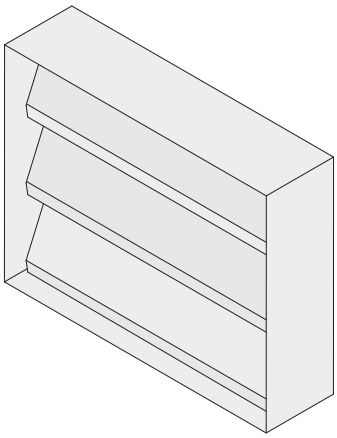

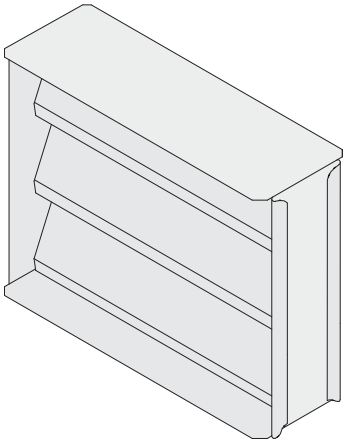

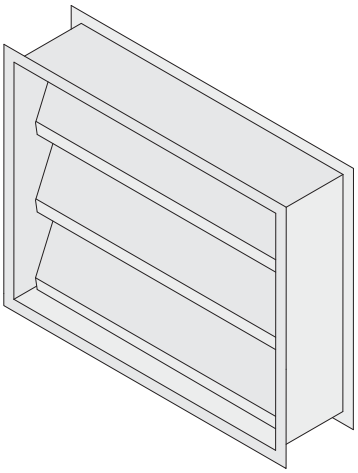

: Duct Exact Size.

•

•

Cross Sectional Drawings for Profile used in Gravity Louvers

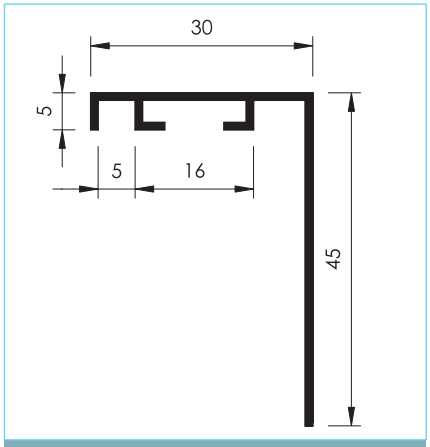

Frame Profile Section

Gravity Louvers

Mullion Arrangement - Model GL

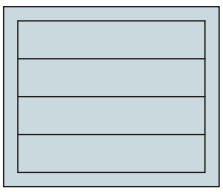

Without Mullion
L ≤ 500 mm

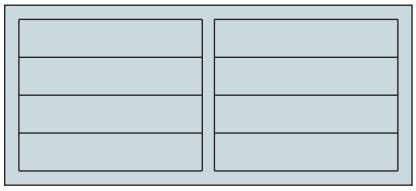

1 Mullion
500 mm < L ≤ 1000 mm

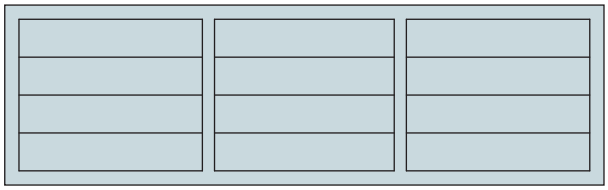

2 Mullions or more
L > 1000 mm

- All Dimensions are in mm and subject to ± 0.2 mm tolerance.

Available Fixing Mounting - Model GL

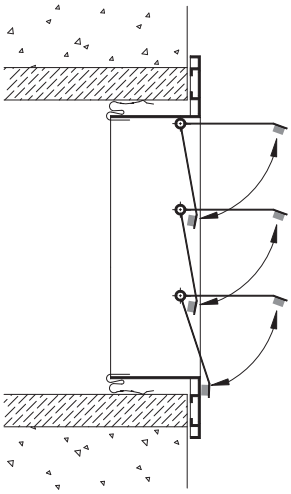

A. Concealed Fixing (Spring Clip Mounting)
The Gravity Louver is fixed by means of spring clips to the wall or partition where no screws are visible.

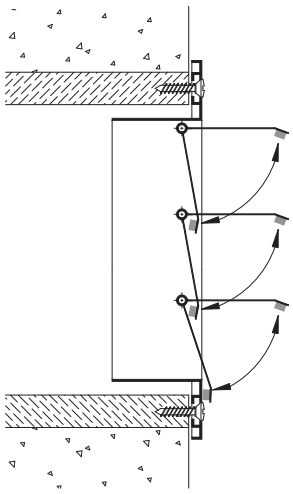

B. Face Screw Fixing
The Gravity Louver is fixed to the wall (with wooden Frame) by means of visible screws.

Engineering and Performance Data

Air Flow Resistance Diagram (All Models)
Pressure Drop (△ Pt) versus Face Velocity (Vf.)

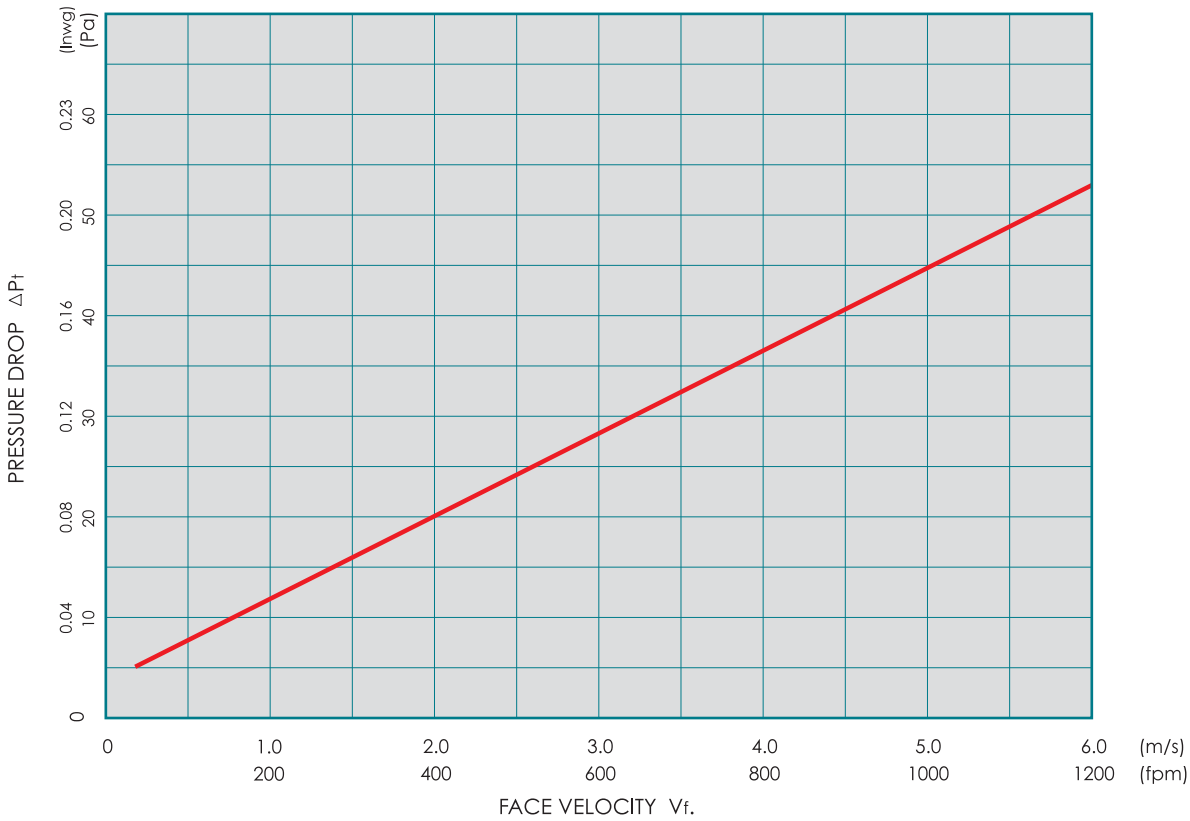

To Calculate The Air Flow Rate (All Models)

Simply the Air Flow Rate in (L/S) or (CFM) can be calculated using any of the following equations :

$$\textbf{Air Flow Rate in (L/S)} = 0.80 \times \frac{L\,(mm) \times H\,(mm) \times V_f.\,(m/s}{1000}$$

or

$$\textbf{Air Flow Rate in (CFM)} = 0.80 \times \frac{L\,(inch) \times H\,(inch) \times V_f.\,(fpm).}{151}$$

L : Louver or Damper Length.
H : Louver or Damper Height.

Note : For quick selection, some selected sizes of Louvers / Dampers at specific Face Velocities (1.0 & 1.5 m/s) have been applied to the above equations and tabulated in the next two pages in the form of CFM values (table No. GL-01 & 02) in order to cover your needs of sizing selection.

Engineering and Performance Data

TABLE GL-01

Air Flow Rate Values In CFM For Selected Sizes of Gravity Louvers / Non Return Dampers @ V_f. = 1.0 (m/s)

L \ H	100	200	300	400	500	600	700	800	900	1000	1100	1200	1300	1400	1500
100	17														
150	25														
200	34	68													
250	42	85													
300	51	102	153												
350	59	119	178												
400	68	136	203	271											
450	76	153	229	305											
500	85	170	254	339	424										
550	93	186	280	373	466										
600	102	203	305	407	509	610									
650	110	220	331	441	551	661									
700	119	237	356	475	593	712	831								
750	127	254	381	509	636	763	890								
800	136	271	407	542	678	814	949	1085							
850	144	288	432	576	720	865	1009	1153							
900	153	305	458	610	763	915	1068	1221	1373						
950	161	322	483	644	805	966	1127	1288	1449						
1000	170	339	509	678	848	1017	1187	1356	1526	1695					
1050	178	356	534	712	890	1068	1246	1424	1602	1780					
1100	186	373	559	746	932	1119	1305	1492	1678	1865	2051				
1150	195	390	585	780	975	1170	1365	1560	1755	1949	2144				
1200	203	407	610	814	1017	1221	1424	1627	1831	2034	2238	2441			
1250	212	424	636	848	1060	1271	1483	1695	1907	2119	2331	2543			
1300	220	441	661	882	1102	1322	1543	1763	1983	2204	2424	2645	2865		
1350	229	458	687	915	1144	1373	1602	1831	2060	2289	2517	2746	2975		
1400	237	475	712	949	1187	1424	1661	1899	2136	2373	2611	2848	3085	3323	
1450	246	492	737	983	1229	1475	1721	1966	2212	2458	2704	2950	3195	3441	
1500	254	509	763	1017	1271	1526	1780	2034	2289	2543	2797	3051	3306	3560	3814
1550	263	526	788	1051	1314	1577	1839	2102	2365	2628	2890	3153	3416	3679	3941
1600	271	542	814	1085	1356	1627	1899	2170	2441	2712	2984	3255	3526	3797	4068
1650	280	559	839	1119	1399	1678	1958	2238	2517	2797	3077	3356	3636	3916	4196
1700	288	576	865	1153	1441	1729	2017	2305	2594	2882	3170	3458	3746	4035	4323
1750	297	593	890	1187	1483	1780	2077	2373	2670	2967	3263	3560	3857	4153	4450
1800	305	610	915	1221	1526	1831	2136	2441	2746	3051	3356	3662	3967	4272	4577
1850	314	627	941	1254	1568	1882	2195	2509	2823	3136	3450	3763	4077	4391	4704
1900	322	644	966	1288	1610	1933	2255	2577	2899	3221	3543	3865	4187	4509	4831
1950	331	661	992	1322	1653	1983	2314	2645	2975	3306	3636	3967	4297	4628	4958
2000	339	678	1017	1356	1695	2034	2373	2712	3051	3390	3729	4068	4408	4747	5086

- L & H Dimensions are in mm.

Engineering and Performance Data

TABLE GL-02

Air Flow Rate Values In CFM For Selected Sizes of Gravity Louvers / Non Return Dampers @ V_f. = 1.5 (m/s)

L \ H	100	200	300	400	500	600	700	800	900	1000	1100	1200	1300	1400	1500
100	25														
150	38														
200	51	102													
250	64	127													
300	76	153	229												
350	89	178	267												
400	102	203	305	407											
450	114	229	343	458											
500	127	254	381	509	636										
550	140	280	420	559	699										
600	153	305	458	610	763	915									
650	165	331	496	661	826	992									
700	178	356	534	712	890	1068	1246								
750	191	381	572	763	954	1144	1335								
800	203	407	610	814	1017	1221	1424	1627							
850	216	432	648	865	1081	1297	1513	1729							
900	229	458	687	915	1144	1373	1602	1831	2060						
950	242	483	725	966	1208	1449	1691	1933	2174						
1000	254	509	763	1017	1271	1526	1780	2034	2289	2543					
1050	267	534	801	1068	1335	1602	1869	2136	2403	2670					
1100	280	559	839	1119	1399	1678	1958	2238	2517	2797	3077				
1150	292	585	877	1170	1462	1755	2047	2339	2632	2924	3217				
1200	305	610	915	1221	1526	1831	2136	2441	2746	3051	3356	3662			
1250	318	636	954	1271	1589	1907	2225	2543	2861	3179	3496	3814			
1300	331	661	992	1322	1653	1983	2314	2645	2975	3306	3636	3967	4297		
1350	343	687	1030	1373	1716	2060	2403	2746	3090	3433	3776	4119	4463		
1400	356	712	1068	1424	1780	2136	2492	2848	3204	3560	3916	4272	4628	4984	
1450	369	737	1106	1475	1844	2212	2581	2950	3318	3687	4056	4424	4793	5162	
1500	381	763	1144	1526	1907	2289	2670	3051	3433	3814	4196	4577	4958	5340	5721
1550	394	788	1182	1577	1971	2365	2759	3153	3547	3941	4335	4730	5124	5518	5912
1600	407	814	1221	1627	2034	2441	2848	3255	3662	4068	4475	4882	5289	5696	6103
1650	420	839	1259	1678	2098	2517	2937	3356	3776	4196	4615	5035	5454	5874	6293
1700	432	865	1297	1729	2161	2594	3026	3458	3890	4323	4755	5187	5620	6052	6484
1750	445	890	1335	1780	2225	2670	3115	3560	4005	4450	4895	5340	5785	6230	6675
1800	458	915	1373	1831	2289	2746	3024	3662	4119	4577	5035	5492	5950	6408	6866
1850	470	941	1411	1882	2352	2823	3293	3763	4235	4704	5175	5645	6115	6586	7056
1900	483	966	1449	1933	2416	2899	3382	3865	4348	4831	5314	5798	6281	6764	7247
1950	496	992	1488	1983	2479	2975	3471	3967	4463	4958	5454	5950	6446	6942	7438
2000	509	1017	1526	2034	2543	3051	3560	4068	4577	5086	5594	6103	6611	7120	7628

- L & H Dimensions are in mm.

Ordering Data

- **Available Surface Finishes For Gravity Louvers :**
  - Natural / Matt Silver Anodized (Frame only) .
  - Powder Coating (Standard Colors are white RAL 9010/ 9016, other optional colors if required to be provided in RAL - No. only and charged extra).
  - Aluminium in Mill Finish.
  - Other Special Finishes (on request if available).

- **Available Surface Finishes For Non Return Dampers :**
  - Frame, only Galvanized steel sheet.
  - Blades, only Aluminium Sheet in Mill Finish.

- **Ordering Specifications :**

Specify :

1 . Louver or Damper Description / Model (GL, NRD - S, C or F).
2 . Nominal / Neck size.
3 . Quantity.
4 . Surface Finish - for Gravity Louvers only.
5 . RAL – No. - for Gravity Louvers only (only mention if powder coating surface finish is required).
6 . Type of Fixing - for Gravity Louvers only (Concealed or Face Screw Fixing).
7 . Rubber Gasket - for Gravity Louvers only (only mention if required).

Example 1 :

1	2	3	4	5	6	7
GL	10" x 10" 250 x 250 (mm)	15	Powder Coating	9010	Concealed	With Rubber Gasket

Example 2 :

1	2	3	4	5	6	7
NRD-S	12" x 6" 300 x 150 (mm)	110	–	–	–	–

Example 3 :

1	2	3	4	5	6	7
NRD-F	32" x 16" 800 x 400 (mm)	2	–	–	–	–

BEST CHOICE INDUSTRIES L.L.C.

MANUFACTURING CENTRAL AIR CONDITIONING AIR OUTLETS

Tel. : 04 - 88 55 422, Fax : 04 - 88 55 421, P.O. Box: 31567, Dubai - U. A. E. - E-mail: bcillc@emirates.net.ae

CHAPTER 9

SAND TRAP LOUVERS

SAND TRAP LOUVERS

SAND TRAP LOUVERS

The Sand Trap Louvers **STL** of **BCI** are designed for usage in serving as a Pre – Filter element in dusty and sandy zone conditions as well as to protect the entry to the external inlets of air conditioning or filtration ducting systems and walls. Blades are formed in U – Profiles placed alternately in vertical configuration. This particular configuration allows a sand and heavy dust separation at high performance rates. The drain holes placed in the lower part let the Louver be self emptying, self cleaning and maintenance free.

Features & Characteristics :

- Construction : Frame & blades are made of high quality Extruded Aluminium Profiles of 6063 Alloy.
- Frame and Blades general wall thickness : 1.5 – 1.8 mm and 1.2 – 1.5 mm respectively.
- Frame Flange width : 20 mm.
- Blades width : 100 mm.
- The vertically U – Inverted blades are assembled in a double bank opposite style configuration which enables the unit to fulfill the requirements for not only a sand or dust filtration but also being a standard weather resisting assembly.
- Flush Mounted Sand Trap Louver type (Model FSTL) is also available. It's convenient to fix on the same plane of the wall with a sand chute tray fixed and inclined at the lower part of the Louver (suitable for all external wall installations).
- Since the STL is only a Pre-Filter unit, it's not recommended to be used alone in a system.
- The adjacent blades are positioned on 40 mm minimum spacing up to 60 mm maximum spacing providing maximum separation of sand or dust from inlet air at low air velocities, thus avoiding excessive dust loading of conventional filters.
- The lower part of the Louver frame contains of 20 mm drain holes arranged in two parallel row for empting the captured sand or dust.
- Available in wide variety of neck sizes with 150 x 150 mm minimum single section size and 2 mtr maximum single section height. Louvers height exceeding 2 mtr to be fabricated and supplied in multiple sections depending on length and height dimensions as well as site conditions.
- The assembly of multiple sections is unlimited where each section operates independently.
- Multiple sections : Supplied as separate sections and assembly by others on site.
- As a standard, the STL.'s are always provided with Bird Screen (Bird Guard) of galvanized steel with 12 x 12 mm grids attached behind the frame to prevent large flying objects and animals to pass through the system. Also available with Insect Screen as an option (on request).
- Sand Trap Louvers are available with different type of attachments such as :
  - Aluminium Filter (Model STL + F).
  - Opposed Blade Damper (Model STL + D).
  - Both the Filter and Damper (Model STL + F + D).
- Mounting instructions : see page No. SL-05.
- Surface Finishes : see page No. SL-09.

Sand Trap Louvers
Construction and Dimensional Details

Model STL

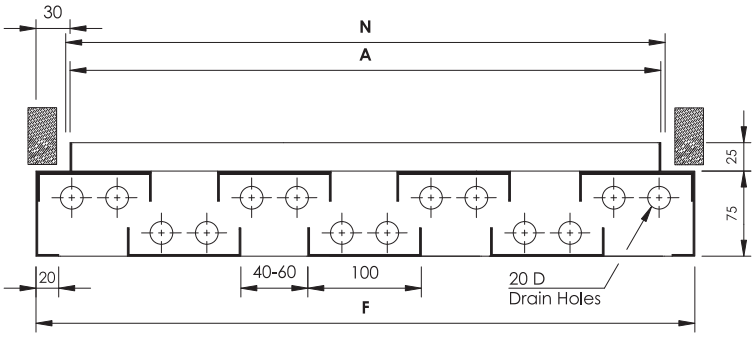

- Bird Screen (standard).

Model STL + F

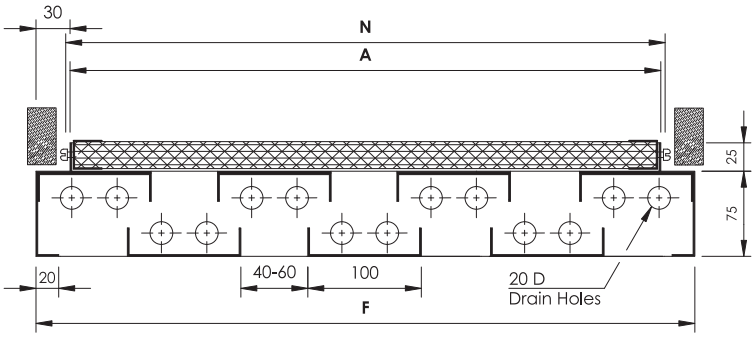

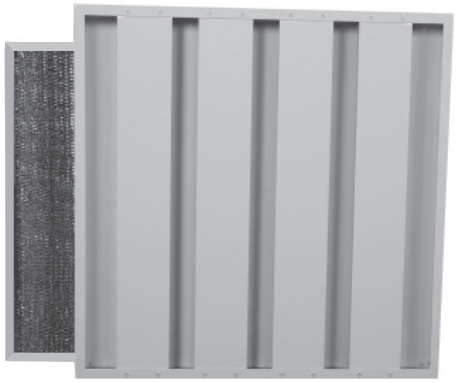

- Bird Screen (standard).
- Filter : Aluminium Washable Filter Media of 1/2 " standard thickness (1 and 2 " thicknesses also available on request as an option).

N : Nominal/Listed Size = Length (L) x Height (H)
A : Actual Size = (L-5) x (H-5)
F : Face Size = (L+55) x (H+55)

- Sand Trap Louvers furnished approximately 5 mm less than the Nominal/Listed Size.
- All Dimensions are in mm and subject to ±1 mm tolerance.

Sand Trap Louvers
Construction and Dimensional Details

Model STL + D

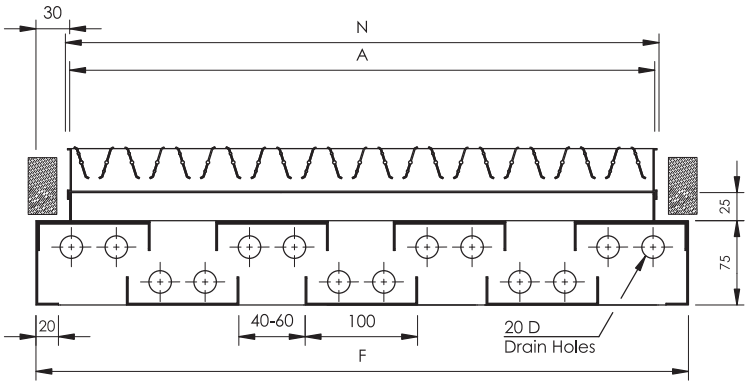

- Bird Screen (standard).
- For Opposed Blade Damper details and construction refer to chapter (1) or (2).
- For large sizes of STL it's not recommanded to use this type of local Opposed Blade Damper due to it's weakness, thus for more rigidity the Opposed Blade Damper has to be replaced by Volume Control Damper (VCD).

Model STL + F + D

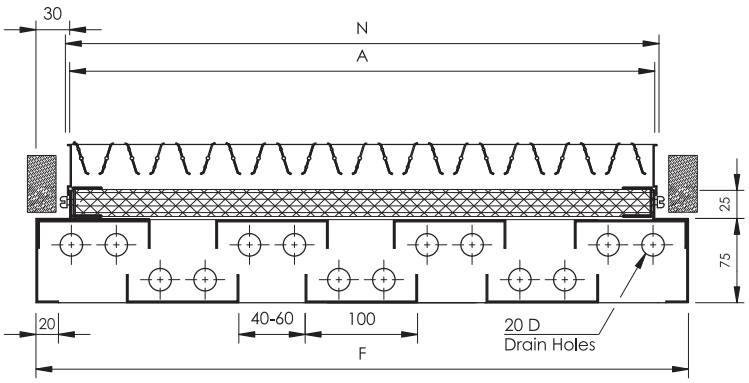

- Bird Screen (standard).
- Filter : Aluminium Washable Filter Media of 1/2 " standard thickness (1 and 2 " thicknesses also available on request as an option).
- For Opposed Blade Damper details and construction refer to chapter (1) or (2).

N : Nominal/Listed Size = Length (L) x Height (H)
A : Actual Size = (L-5) x (H-5)
F : Face Size = (L+55) x (H+55)

- Sand Trap Louvers furnished approximately 5 mm less than the Nominal/Listed Size.
- All Dimensions are in mm and subject to ±1 mm tolerance.

Flush Mounted Sand Trap Louvers
Construction and Dimensional Details

Model FSTL

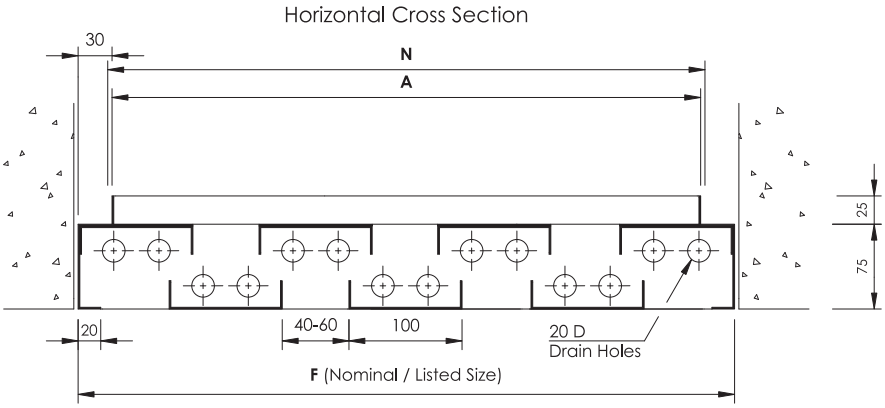

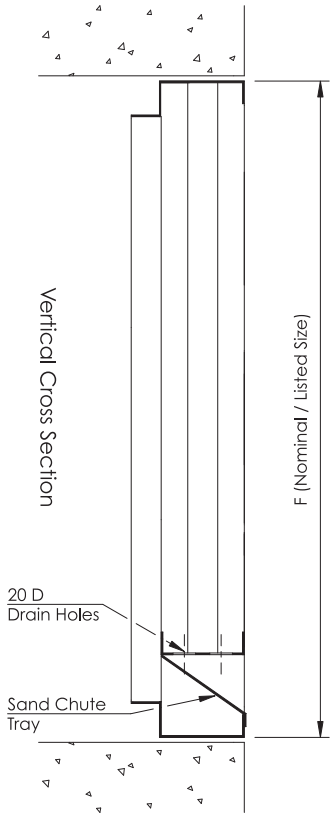

- Louver immerged inside the wall level.

- Bird Screen (standard).
- This model usually used when the Sand Trap Louver is required to be installed in plane with the external wall of the building from outside.
- It's provided with especially designed sand chute tray as shown in order to ensure the discharge of captured sand or dust to outside the building.
- Also it's available with different Type of attachments such as :
  - Aluminium Filter (Model FSTL + F).
  - Opposed Blade Damper (Model FSTL + D).
  - Both the Filter and Damper (Model FSTL + F + D).
- As a unique case, the sizing of this type of Louvers should be specified in outer frame dimensions i.e. the Face size will be treated as a Nominal / Listed Size to fit the external wall opening as shown.

F : Nominal/Listed Size (Face Size)	= Length (L) x Height (H)
A : Actual Size	= (L-5) x (H-5)
N : Neck Size	= (L-55) x (H-55)

- Flush Mounted Sand Trap Louvers furnished approximately 5 mm less than the Nominal/Listed face size.
- All Dimensions are in mm and subject to ±1 mm tolerance.

Cross Sectional Drawings for Profiles used in Sand Trap Louvers

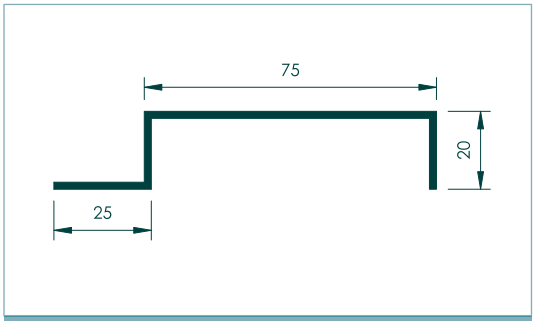

Frame Profile Section

Sand Trap Louvers

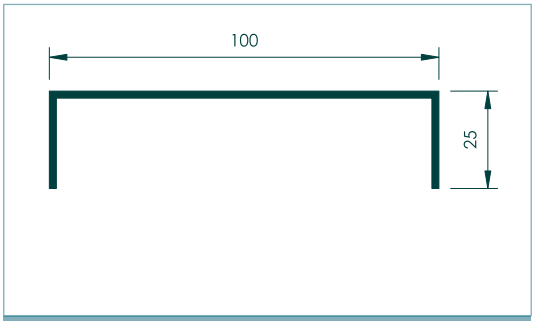

Blade Profile Section

Sand Trap Louvers

- All Dimensions are in mm and subject to ± 0.2 mm tolerance.

Available Fixing Mounting

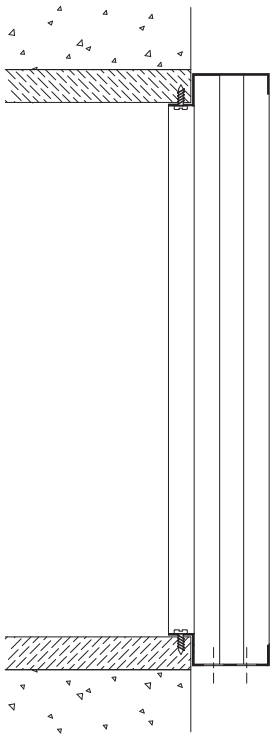

A. Screw Fixing (Fixing to wall)

Sand Trap Louver is fixed to the wall through it's neck by means of screws as shown.

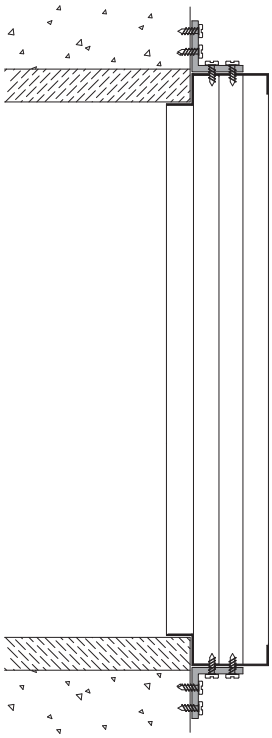

B. Angle Fixing (By Others)

For large sizes, it's recommended to use supporting Steel or Aluminium 90 ° angle as shown above to reinforce holding of the louver by outside wall.

Engineering and Performance Data

Air Flow Resistance Diagram (All Models)

Pressure Drop (△ Pt), Efficiency (%) versus Face Velocity (Vf.)

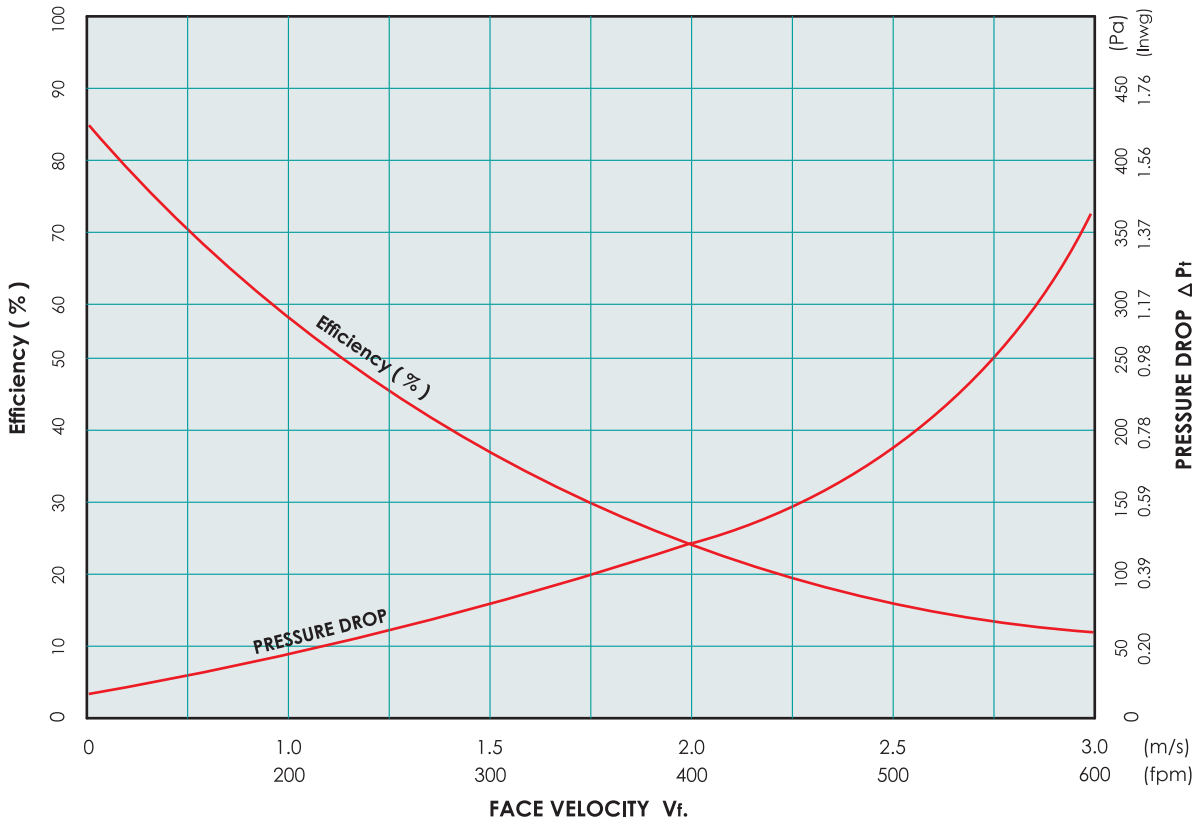

To Calculate The Air Flow Rate (All Models)

Simply the Air Flow Rate in (L/S) or (CFM) can be calculated using any of the following equations :

$$\text{Air Flow Rate in (L/S)} = 0.33 \times \frac{L\,(mm) \times H\,(mm) \times V_f.\,(m/s)}{1000}$$

or

$$\text{Air Flow Rate in (CFM)} = 0.33 \times \frac{L\,(inch) \times H\,(inch) \times V_f.\,(fpm).}{151}$$

L : Louver Length.
H : Louver Height.

Filtration Efficiency :

The filtration performance is dependant on the dust type and the velocity of the air, thus :

Particle Size Range	Filtration Efficiency in (%) @ 1.0 m/s	@ 2.0 m/s
350 – 700	90	70
75 – 700	60	approx. 30

For normal operation conditions, Sand Trap Louvers used for natural ventilation purpose are rated at a recommended Face velocity not exceeding 1.0 – 1.5 m/s.

Note : For quick selection, some selected sizes of Louvers at specific Face Velocities (1.0 & 1.5 m/s) have been applied to the above equations and tabulated in the next two pages in the form of CFM values (table No. SL-01 & 02) in order to cover your needs of sizing selection.

Engineering and Performance Data

TABLE SL-01

Air Flow Rate Values In CFM For Selected Sizes of Sand Trap Louvers @ $V_{f.}$ = 1.0 (m/s)

L \ H	100	200	300	400	500	600	700	800	900	1000	1100	1200	1300	1400	1500
100	7														
150	10														
200	14	28													
250	17	35													
300	21	42	63												
350	24	49	73												
400	28	56	84	112											
450	31	63	94	126											
500	35	70	105	140	175										
550	38	77	115	154	192										
600	42	84	126	168	210	252									
650	45	91	136	182	227	273									
700	49	98	147	196	245	294	343								
750	52	105	157	210	262	315	367								
800	56	112	168	224	280	336	392	448							
850	59	119	178	238	297	357	416	476							
900	63	126	189	252	315	378	441	503	566						
950	66	133	199	266	332	399	465	531	598						
1000	70	140	210	280	350	420	489	559	629	699					
1050	73	147	220	294	367	441	514	587	661	734					
1100	77	154	231	308	385	462	538	615	692	769	846				
1150	80	161	241	322	402	482	563	643	724	804	885				
1200	84	168	252	336	420	503	587	671	755	839	923	1007			
1250	87	175	262	350	437	524	612	699	787	874	961	1049			
1300	91	182	273	364	455	545	636	727	818	909	1000	1091	1182		
1350	94	189	283	378	472	566	661	755	850	944	1038	1133	1227		
1400	98	196	294	392	489	587	685	783	881	979	1077	1175	1273	1371	
1450	101	203	304	406	507	608	710	811	913	1014	1115	1217	1318	1420	
1500	105	210	315	420	524	629	734	839	944	1049	1154	1259	1364	1468	1573
1550	108	217	325	434	542	650	759	867	975	1084	1192	1301	1409	1517	1626
1600	112	224	336	448	559	671	783	895	1007	1119	1231	1343	1454	1566	1678
1650	115	231	346	462	577	692	808	923	1038	1154	1269	1385	1500	1615	1731
1700	119	238	357	476	594	713	832	951	1070	1189	1308	1427	1545	1664	1783
1750	122	245	367	489	612	734	857	979	1101	1224	1346	1468	1591	1713	1836
1800	126	252	378	503	629	755	881	1007	1133	1259	1385	1510	1636	1762	1888
1850	129	259	388	517	647	776	906	1035	1164	1294	1423	1552	1682	1811	1940
1900	133	266	399	631	664	797	930	1063	1196	1329	1461	1594	1727	1860	1993
1950	136	273	409	545	682	818	955	1091	1227	1364	1500	1636	1773	1909	2045
2000	140	280	420	559	699	839	979	1119	1259	1399	1538	1678	1818	1958	2098

- L & H Dimensions are in mm.
- Damper at full open position (if any).

Engineering and Performance Data

TABLE SL-02

Air Flow Rate Values In CFM For Selected Sizes of Sand Trap Louvers @ V f. = 1.5 (m/s)

L \ H	100	200	300	400	500	600	700	800	900	1000	1100	1200	1300	1400	1500
100	10														
150	16														
200	21	42													
250	26	52													
300	31	63	94												
350	37	73	110												
400	42	84	126	168											
450	47	94	142	189											
500	52	105	157	210	262										
550	58	115	173	231	288										
600	63	126	189	252	315	378									
650	68	136	205	273	341	409									
700	73	147	220	294	367	441	514								
750	79	157	236	315	393	472	551								
800	84	168	252	336	420	503	587	671							
850	89	178	267	357	446	535	624	713							
900	94	189	283	378	472	566	661	755	850						
950	100	199	299	399	498	598	698	797	897						
1000	105	210	315	420	524	629	734	839	944	1049					
1050	110	220	330	441	551	661	771	881	991	1101					
1100	115	231	346	462	577	692	808	923	1038	1154	1269				
1150	121	241	362	482	603	724	844	965	1086	1206	1327				
1200	126	252	378	503	629	755	881	1007	1133	1259	1385	1510			
1250	131	262	393	524	656	787	918	1049	1180	1311	1442	1573			
1300	136	273	409	545	682	818	955	1091	1227	1364	1500	1636	1773		
1350	142	283	425	566	708	850	991	1133	1274	1416	1558	1699	1841		
1400	147	294	441	587	734	881	1028	1175	1322	1468	1615	1762	1909	2056	
1450	152	304	456	608	760	913	1065	1217	1369	1521	1673	1825	1977	2129	
1500	157	315	472	629	787	944	1101	1259	1416	1573	1731	1888	2045	2203	2360
1550	163	325	488	650	813	975	1138	1301	1463	1626	1788	1951	2114	2276	2439
1600	168	336	503	671	839	1007	1175	1343	1510	1678	1846	2014	2182	2350	2517
1650	173	346	519	692	865	1038	1211	1385	1558	1731	1904	2077	2250	2423	2596
1700	178	357	535	713	892	1070	1248	1427	1605	1783	1961	2140	2318	2496	2675
1750	184	367	551	734	918	1101	1285	1468	1652	1836	2019	2203	2386	2570	2753
1800	189	378	566	755	944	1133	1322	1510	1699	1888	2077	2266	2454	2643	2832
1850	194	388	582	776	970	1164	1358	1552	1746	1940	2135	2329	2523	2717	2911
1900	199	399	598	797	996	1196	1395	1594	1794	1993	2192	2392	2591	2790	2989
1950	205	409	614	818	1023	1227	1432	1636	1841	2045	2250	2454	2659	2864	3068
2000	210	420	629	839	1049	1259	1468	1678	1888	2098	2308	2517	2727	2937	3147

- L & H Dimensions are in mm.
- Damper at full open position (if any).

Ordering Data

- **Available Surface Finishes For Sand Trap Louvers :**
  - Natural / Matt Silver Anodized .
  - Powder Coating (Standard Colors are white RAL 9010/ 9016, other optional colors if required to be provided in RAL - No. only and charged extra).
  - Aluminium in Mill Finish.
  - Other Special Finishes (on request if available).

- **Available Surface Finishes For Opposed Blade Damper :**
  - Aluminium in Mill Finish (standard).
  - Matt Black Powder Coating (optional).

- **Ordering Specifications :**

Specify :

1 . Sand Trap Louver Description / Model (STL, STL + F, ...etc.).
2 . Nominal / Neck size.
3 . Quantity.
4 . Sand Trap Louvers Surface Finish.
5 . RAL – No.(only mention if powder coating surface finish is required).
6 . Thickness of Aluminium Filter for models attached with Filter (only mention if optional 1 or 2 " thickness is required).

Example 1 :

1	2	3	4	5	6
STL	16" x 12" 400 x 300 (mm)	10	Powder Coating	9016	—

Example 2 :

1	2	3	4	5	6
STL + F + D	24" x 16" 600 x 400 (mm)	3	Mill Finish	—	2" (optional)

Example 3 :

1	2	3	4	5	6
FSTL + F	40" x 40" 1000 x 1000 (mm)	5	Powder Coating	7035 (optional)	1" (optional)

BEST CHOICE INDUSTRIES L.L.C.

MANUFACTURING CENTRAL AIR CONDITIONING AIR OUTLETS

Tel. : 04 - 88 55 422, Fax : 04 - 88 55 421, P.O. Box: 31567, Dubai - U. A. E. - E-mail: bcillc@emirates.net.ae

CHAPTER 10

CIRCULAR CEILING DIFFUSERS

CHAPTER-10

CIRCULAR CEILING DIFFUSERS

CIRCULAR CEILING DIFFUSERS

The Circular or Round Diffusers of **BCI** provide an alternative to conventional square or rectangular diffusers for both ceiling supply and extract applications. Mounted on exposed duct-work or flush with a conventional ceiling and offering an attractive appearance, these omni directional diffusers, with their aerodynamic profile, are capable of handling high air volumes at comparatively low sound levels and give a smooth even distribution of air.
Circular Ceiling Diffusers are available in field - adjustable air pattern consists of a conical designed inner core to provide three adjustable positions, horizontal, vertical or any intermediate position. For example, at the full vertical position, it provides an unusually long downward projection serving high ceiling areas of variable conditions.

Features & Characteristics :

- Construction : Frame & inner cones (core) are of pressed Aluminium sheet constructions.
- Damper (Butterfly type) Construction : steel sheet in matt black powder coating finish.
- Circular / Round Diffusers are one of the best solutions for ceiling air diffusion in air conditioning systems suitable for large offices, commercial and shopping centers, industrial buildings, warehouses, cinemas,.....etc. The high induction rate, extremely silent operation and low pressure drops assure optimum performance and a high level of ambient comfort.
- The inner cones (core) are in conical shape, omni directional air discharge, modern styling and removable allowing for easy installation, balancing, cleaning, damper adjustment and access to duct system.
- Wide step down cones (core) overlap with each other for efficient draft free diffusion. Especially designed outer ring (frame) helps to reduce ceiling smudge.
- Expanded cones feature gives a high degree of mixing of primary and secondary air that provides excellent air distribution and efficiency.
- Just by adjusting the position of inner cones, desirable airflow patterns are ensured. Thus rotating the core to "UP" position until it reaches it's stop point is allowing for maximum vertical throw, in reverse the same can be lowered to "DOWN" position allowing for maximum horizontal throw.
- Available in 8 standard neck sizes ranging from 150 mm ø up to 500 mm ø in 50 mm increments.
- Consists of 2 inner cones for 150 and 200 mm ø sizes and 3 inner cones for other sizes.
- Butterfly Damper : Matt black powder coated, allows adjustment from the face side of the diffuser. For more details see page No. RD-04.
- Sponge Gasket to reduce air infiltration and diffuser rattling is added around the outer ring as an option with extra cost.
- Mounting Instructions : see page No. RD-04.
- Surface Finishes : see page No. RD-07.

TABLE RD-01

OPERATING RANGE & QUICK SELECTION TABLE

Nominal / Listed Sizes (N)		Noise Level			
mm	Inch	Min	<25	>25	>40
150 ø	6 " ø	60	170	175	315
200 ø	8 " ø	105	200	245	560
250 ø	10 " ø	165	425	435	870
300 ø	12 " ø	235	600	630	1255
350 ø	14 " ø	320	660	700	1710
400 ø	16 " ø	420	900	940	2240
450 ø	18 " ø	530	1150	1240	2830
500 ø	20 " ø	655	1400	1525	3490

- Figures are in CFM

Influence of Central Core Position on Outlet Performance

Vertical Throw

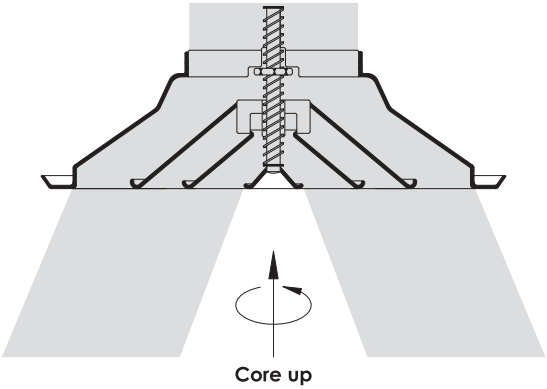

- To obtain the maximum vertical throw, turn the central core to " UP " position.

Horizontal Throw

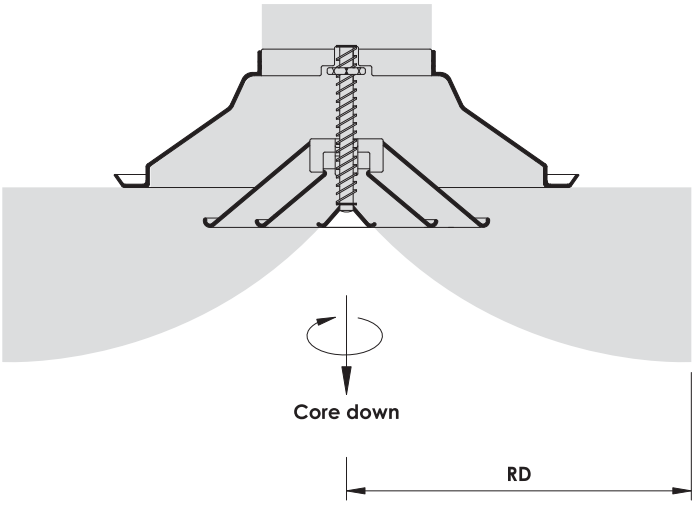

- To obtain the maximum horizontal throw, turn the central core to " DOWN" position.
- Radius of Diffusion (RD) : The horizontal axial distance an airstream travels after leaving the circular diffuser before the maximum stream velocity is reduced to a specified terminal level.

Models
Construction and Dimensional Details

Circular Supply Ceiling Diffuser, Model CSCD C/W BFD

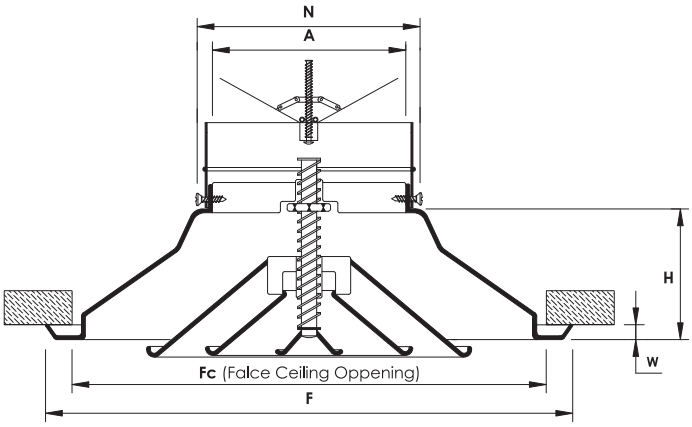

- Diffusers called Circular Supply Ceiling Diffuser and coded as **CSCD C/W BFD** are always equipped with Butterfly Damper (provided as standard).

Circular Return Ceiling Diffuser, Model CRCD W/O DAMPER

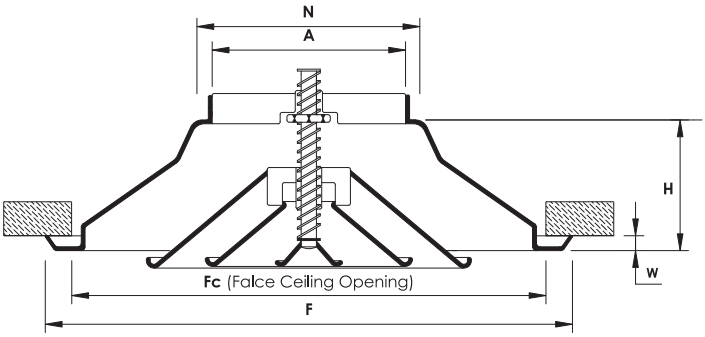

- Unless otherwise specified, Diffusers called Circular Return Ceiling Diffuser and coded as **CRCD W/O DAMPER** are usually supplied w/o damper as a standard.

TABLE RD - 02

NECK & OTHER DIMENSIONS FOR CIRCULAR DIFFUSERS

Nominal / Listed Sizes (N)		Dimensions in mm				
mm	Inch	A Ø	F Ø	Fc Ø	H	W
150 ø	6 " ø	146	321	295	46	10
200 ø	8 " ø	197	429	391	60	11
250 ø	10 " ø	248	537	483	81	13
300 ø	12 " ø	298	645	573	95	16
350 ø	14 " ø	349	746	664	114	19
400 ø	16 " ø	400	864	756	130	22
450 ø	18 " ø	451	978	848	148	19
500 ø	20 " ø	502	1092	940	166	22

- All Dimensions are in mm and subject to ± 2mm tolerance.

Butterfly Damper

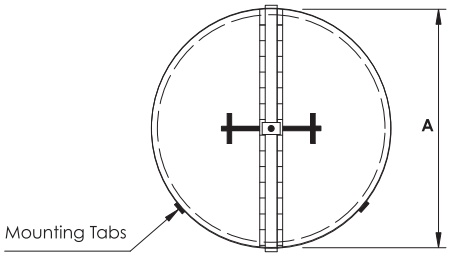

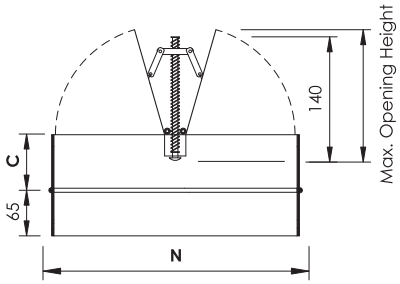

- Economical designed damper for volume control.
- Continuously adjustable.
- Friction Pivots hold the heavy guage blades at the desired position.
- Easily adjusted from the face side of the diffuser.
- Can be mounted directly on the diffuser neck before installation.
- Factory assembled for supply diffuser model only.

TABLE RD - 03

Butterfly Damper Dimensions

Nominal / Listed Sizes (N)		Dimensions in mm		
mm	Inch	A Ø	B Ø	C Ø
150 ø	6 " ø	149	81	51
200 ø	8 " ø	200	106	51
250 ø	10 " ø	251	132	51
300 ø	12 " ø	302	160	51
350 ø	14 " ø	352	185	51
400 ø	16 " ø	403	203	76
450 ø	18 " ø	454	229	76
500 ø	20 " ø	505	265	76

Mounting Instructions

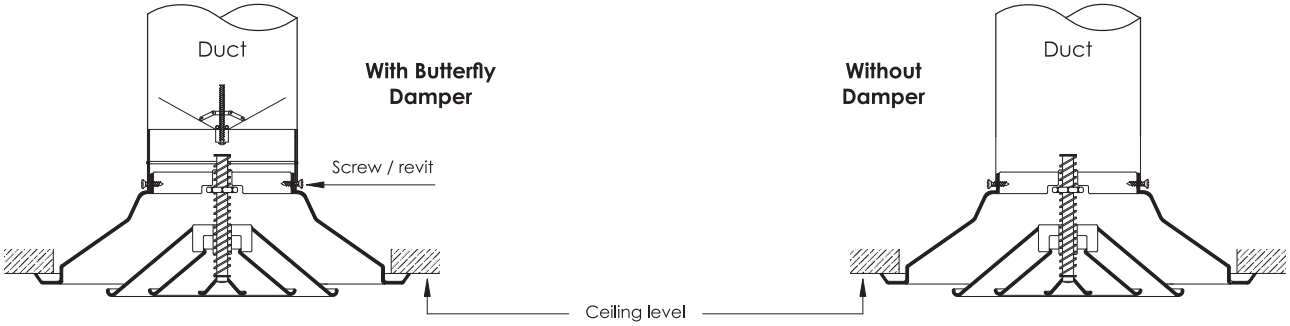

- Install outer frame of the circular diffuser by means of ceiling hangers or with the help of self tapping screws. Duct joints are then sealed with adhesive tape.
- Central core assembly can be detached or attached by rotating anti-clockwise or clockwise direction.
- Horizontal or vertical discharge pattern could be achieved by rotating the central core clockwise or anti-clockwise, thus :
  - rotate the central core clockwise until you get the required horizontal discharge pattern.
  - rotate the central core anti-clockwise to get the required vertical discharge pattern.
- Butterfly damper is attached to the outer frame collar of the diffuser back side. Damper adjustable from the face of the diffuser by rotating the central core part anti-clockwise and removing it, then with the help of a screw driver damper can be adjusted.

Engineering & Performance Data

Tabular Selection for Circular Supply Ceiling Diffusers, Model CSCD C/W BFD

TABLE RD-04

DIA. Neck Size		$A_{eff.}$	$V_{eff.}$ m/s (FPM)		1.5 (300)	2.0 (400)	2.5 (500)	3.0 (600)	3.5 (700)	4.0 (800)	4.5 (900)	5.0 (1000)	5.5 (1100)	6.0 (1200)	7.0 (1400)	8.0 (1600)
Inch	mm	m^2	Pv (Pa)		2	3	4	6	8	10	13	16	19	23	31	41
6"	150	0.018	L/S (CFM)		28 (60)	38 (80)	47 (100)	57 (120)	64 (135)	73 (155)	83 (175)	92 (195)	101 (215)	111 (235)	130 (275)	149 (315)
			△ Pt (Pa)	H	6	10	17	24	32	41	53	65	78	93	126	166
				V	9	15	24	34	46	59	76	93	111	134	181	238
			RD (m)		0.6-0.9	0.6-1.2	0.9-1.5	0.9-1.5	1.2-1.8	1.2-1.8	1.5-2.1	1.5-2.1	1.5-2.1	1.8-2.4	1.8-2.4	2.1-2.7
			Noise Level		<20	<20	<20	<20	<20	23	26	30	33	35	40	44
8"	200	0.032	L/S (CFM)		50 (105)	66 (140)	83 (175)	99 (210)	116 (245)	132 (280)	149 (315)	165 (350)	182 (385)	198 (420)	231 (490)	264 (560)
			△ Pt (Pa)	H	4	7	12	17	23	29	37	46	55	66	89	117
				V	7	11	18	26	35	45	57	71	84	101	137	180
			RD (m)		0.6-1.2	0.9-1.5	1.2-1.8	1.2 -2.1	1.5-2.1	1.8-2.4	1.8-2.4	2.1-2.7	2.1-3.0	2.1-3.0	2.4-3.3	2.7-3.6
			Noise Level		<20	<20	<20	21	26	31	34	37	40	44	48	>50
10"	250	0.050	L/S (CFM)		78 (165)	104 (220)	130 (275)	153 (325)	179 (380)	205 (435)	231 (490)	257 (545)	283 (600)	309 (655)	361 (765)	411 (870)
			△ Pt (Pa)	H	4	7	11	16	22	28	36	44	53	63	86	113
				V	6	10	17	24	33	42	54	67	79	95	129	169
			RD (m)		0.9-1.8	1.5-2.1	1.5-2.4	1.8-2.7	2.1-2.7	2.4-3.0	2.4-3.4	2.7-3.7	2.7-3.7	3.0-4.0	3.4-4.3	3.7-4.6
			Noise Level		<20	<20	<20	<20	21	26	30	33	36	39	44	48
12"	300	0.073	L/S (CFM)		111 (235)	149 (315)	186 (395)	222 (470)	260 (550)	297 (630)	333 (705)	370 (785)	408 (865)	444 (940)	519 (1100)	592 (1255)
			△ Pt (Pa)	H	4	6	10	15	20	25	32	40	47	57	77	25
				V	6	9	15	21	29	37	47	58	69	83	112	37
			RD (m)		1.2-1.8	1.5-2.1	1.8-2.7	2.1-3.0	2.4-3.4	2.7-3.7	3.0-4.0	3.0-4.3	3.4-4.3	3.4-4.6	4.0-4.9	4.3-5.5
			Noise Level		<20	<20	<20	<20	22	26	30	33	36	39	45	49
14"	350	0.100	L/S (CFM)		151 (320)	203 (430)	252 (535)	302 (640)	354 (750)	403 (855)	455 (965)	1070	1175	1285	1500	1710
			△ Pt (Pa)	H	4	6	10	14	19	25	31	39	46	55	75	98
				V	6	9	15	21	29	37	47	58	69	83	112	147
			RD (m)		1.2-2.1	1.8-2.4	2.1-3.0	2.4-3.4	2.7-3.7	3.0-4.0	3.4-4.6	3.7-4.9	4.0-4.9	4.0-5.2	4.6-5.8	4.9-7.0
			Noise Level		<20	<20	<20	23	28	32	36	40	43	46	>50	>50
16"	400	0.130	L/S (CFM)		198 (420)	264 (560)	330 (700)	396 (840)	462 (980)	529 (1120)	595 (1260)	661 (1400)	727 (1540)	793 (1680)	925 (1960)	1057 (2240)
			△ Pt (Pa)	H	4	6	9	14	18	24	30	37	44	53	72	94
				V	5	9	14	20	28	36	45	56	67	80	108	142
			RD (m)		1.5-2.1	2.1-3.0	2.4-3.7	3.0-4.0	3.4-4.6	3.7-4.9	4.0-5.2	4.3-5.5	4.6-5.8	4.6-6.1	5.2-6.4	5.8-7.0
			Noise Level		<20	<20	<20	22	27	31	35	39	42	44	49	>50
18"	450	0.164	L/S (CFM)		250 (530)	335 (710)	418 (885)	500 (1060)	585 (1240)	668 (1415)	753 (1595)	835 (1770)	918 (1945)	1003 (2125)	1170 (2480)	1336 (2830)
			△ Pt (Pa)	H	4	6	9	13	18	23	29	36	43	51	70	91
				V	6	9	15	22	29	38	48	59	70	84	115	150
			RD (m)		1.8-2.4	2.13.4	2.7-3.7	3.0-4.3	3.7-4.9	4.0-5.2	4.3-5.8	4.9-6.1	4.9-6.4	5.5-6.7	5.8-7.3	6.4-7.6
			Noise Level		<20	<20	<20	21	26	30	34	37	40	43	48	>50
20"	500	0.203	L/S (CFM)		309 (655)	411 (870)	514 (1090)	618 (1310)	720 (1525)	824 (1745)	925 (1960)	1029 (2180)	1133 (2400)	1234 (2615)	1439 (3050)	1647 (3490)
			△ Pt (Pa)	H	3	5	8	12	16	21	27	33	39	47	64	84
				V	6	10	16	13	31	40	51	63	75	90	122	160
			RD (m)		1.8-2.7	2.4-3.7	3.0-4.3	3.7-4.9	4.3-5.2	4.6-5.8	4.9-6.4	5.2-6.7	5.5-7.0	5.8-7.3	6.4-7.9	7.0-8.5
			Noise Level		<20	<20	<20	21	26	30	34	38	40	43	48	>50

Pv : Velocity Pressure.
H : Horizontal Pattern Position.
V : Vertical Pattern Position.
RD : Radius of Diffusion based on a min. terminal velocity of 100 FPM and max. terminal velocity of 50 FPM (using isothermal air and horizontal pattern position).
△ Pt : Total Pressure Drop, the sum of static pressure + Pv given in (Pa).
- NC : Noise level values are based on 10 dB room attenuation and horizontal pattern position. For vertical pattern add (1) dB.
- Demper at full open position.

Engineering & Performance Data

Tabular Selection for Circular Return Ceiling Diffusers, Model CRCD W/O DAMPER

TABLE RD-05

DIA. Neck Size		$A_{eff.}$	$V_{eff.}$ m/s (FPM)	1.5 (300)	2.0 (400)	2.5 (500)	3.0 (600)	3.5 (700)	4.0 (800)	4.5 (900)	5.0 (1000)	5.5 (1100)	6.0 (1200)	7.0 (1400)	8.0 (1600)
Inch	mm	m^2	Pv (Pa)	2	3	4	6	8	10	13	16	19	23	31	41
6 "	150	0.018	L/S (CFM)	28 (60)	38 (80)	47 (100)	57 (120)	64 (135)	73 (155)	83 (175)	92 (195)	101 (215)	111 (235)	130 (275)	149 (315)
			Negative SP (Pa)	6	9	15	22	29	37	48	59	70	84	114	150
			Noise Level	<20	<20	<20	<20	21	25	28	32	34	37	42	46
8 "	200	0.032	L/S (CFM)	50 (105)	66 (140)	83 (175)	99 (210)	116 (245)	132 (280)	149 (315)	165 (350)	182 (385)	198 (420)	231 (490)	264 (560)
			Negative SP (Pa)	3	6	9	13	17	23	29	36	43	51	69	91
			Noise Level	<20	<20	<20	23	28	32	34	37	41	46	>50	>50
10 "	250	0.050	L/S (CFM)	78 (165)	104 (220)	130 (275)	153 (325)	179 (380)	205 (435)	231 (490)	257 (545)	283 (600)	309 (655)	361 (765)	411 (870)
			Negative SP (Pa)	3	6	9	12	17	22	27	34	40	49	66	86
			Noise Level	<20	<20	<20	<20	23	28	32	35	38	41	46	50
12 "	300	0.073	L/S (CFM)	111 (235)	149 (315)	186 (395)	222 (470)	260 (550)	297 (630)	333 (705)	370 (785)	408 (865)	444 (940)	519 (1100)	592 (1255)
			Negative SP (Pa)	3	5	7	10	14	18	23	29	34	40	55	72
			Noise Level	<20	<20	<20	<20	23	28	32	35	38	41	47	>50
14 "	350	0.100	L/S (CFM)	151 (320)	203 (430)	252 (535)	302 (640)	354 (750)	403 (855)	455 (965)	505 (1070)	555 (1175)	606 (1285)	708 (1500)	807 (1710)
			Negative SP (Pa)	3	4	7	10	13	17	22	27	32	39	52	69
			Noise Level	<20	<20	20	25	30	34	38	42	45	48	>50	>50
16"	400	0.130	L/S (CFM)	198 (420)	264 (560)	330 (700)	396 (840)	462 (980)	529 (1120)	595 (1260)	661 (1400)	727 (1540)	793 (1680)	925 (1960)	1057 (2240)
			Negative SP (Pa)	3	4	6	9	12	16	20	25	30	36	49	64
			Noise Level	<20	<20	<20	24	29	33	37	41	44	46	>50	>50
18 "	450	0.164	L/S (CFM)	250 (530)	335 (710)	418 (885)	500 (1060)	585 (1240)	668 (1415)	753 (1595)	835 (1770)	918 (1945)	1003 (2125)	1170 (2480)	1336 (2830)
			Negative SP (Pa)	3	4	6	9	12	15	19	24	28	34	46	60
			Noise Level	<20	<20	<20	23	28	32	36	39	43	45	50	>50
20 "	500	0.203	L/S (CFM)	309 (655)	411 (870)	514 (1090)	618 (1310)	720 (1525)	824 (1745)	925 (1960)	1029 (2180)	1133 (2400)	1234 (2615)	1439 (3050)	1647 (3490)
			Negative SP (Pa)	2	3	5	7	10	13	17	20	24	29	39	52
			Noise Level	<20	<20	<20	23	28	32	36	40	43	45	50	>50

Pv : Velocity Pressure.
Negative SP : Negative static pressure.
● NC : Noise level values are based on 10 dB room attenuation.

Ordering Data

- **Available Surface Finishes For Circular Ceiling Diffusers :**
  - Powder Coating (Standard Colors are white RAL 9010 / 9016, other optional colors if required to be provided in RAL - No. only and charged extra).
  - Aluminium in Mill Finish.

- **Available Surface Finishes For Butterfly Damper :**
  - Standard, Matt Black Powder Coating.

- **Ordering Specifications :**

Specify :

1 . Circular Ceiling Diffuser Description / Model (Supply or Return).
2 . Butterfly Damper (only mention for supply model).
3 . Nominal / Neck Diameter Size.
4 . Quantity.
5 . RAL – No.

Example 1 :

1	2	3	4	5
CSCD	C/W BFD	12 " Ø 300 mm Ø	5	9010

Example 2 :

1	2	3	4	5
CRCD	W/O DAMPER	10 " Ø 250 mm Ø	15	7045 (optional)

Example 3 :

1	2	3	4	5
CRCD	W/O DAMPER	16 " Ø 400 mm Ø	2	Mill Finish

BEST CHOICE INDUSTRIES L.L.C.

MANUFACTURING CENTRAL AIR CONDITIONING AIR OUTLETS

Tel. : 04 - 88 55 422, Fax : 04 - 88 55 421, P.O. Box: 31567, Dubai - U. A. E. - E-mail: bcillc@emirates.net.ae

CHAPTER 11

DISC VALVES

DISC VALVES

DISC VALVES

Disc / Air Valves are a pleasing terminal device which contains good appearance with a very accurate control over supply or exhaust air volumes.
The Disc Valves have been designed to provide a compact, clean and attractive means to ventilate (supply or exhaust) bathrooms , toilets, wash rooms, kitchens and other small rooms.

Features & Characteristics :

- Construction : outer ring and inner disc are manufactured from steel sheet and finished in durable white powder coating color to RAL – 9010 as standard.
- Fixing Collar or Mounting Ring is manufactured from galvanized steel sheet and supplied as a standard with no extra cost.
- Sponge Gasket : provided around the back side of the outer ring as a standard with no extra cost.
- They can provide relatively high air volumes whilst retaining good diffusion and low noise and pressure drop characteristics.
- The inner disc (core) is fully adjustable, its connected to the outer frame by threaded rod for accurate and easy adjustment.
- Fixing is obtained by twisting the valve body into the fixing collar until attaining a perfect seal utilizing the gasket provided.
- Valve adjustment is achieved by simply rotating the inner disc (core) inwards or outwards on its spindle and locking into its set position using the holding nut at the rear of the valve assembly.
- Mounting Instructions : see page No. DV-03.
- Surface Finishes : see page No. DV-07.

TABLE DV - 01

OPERATING RANGE & QUICK SELECTION TABLE											
SUPPLY						EXHAUST					
Available Sizes		Noise Level				Available Sizes		Noise Level			
mm	Inch	Min.	<25	>25	35	mm	Inch	Min.	<25	>25	35
100 ø	4 " ø	5	26	28	40	100 ø	4 " ø	5	60	62	85
150 ø	6 " ø	30	100	105	140	150 ø	6 " ø	20	140	145	220
200 ø	8 " ø	10	90	100	118	200 ø	8 " ø	20	245	250	350

- Figures are in (m^3 / h).
- Selection based on (0) level position (see pages No. DV-04, 05 & 06).

Models
Construction and Dimensional Details

Supply Disc Valve, Model SUPPLY D.V. METAL

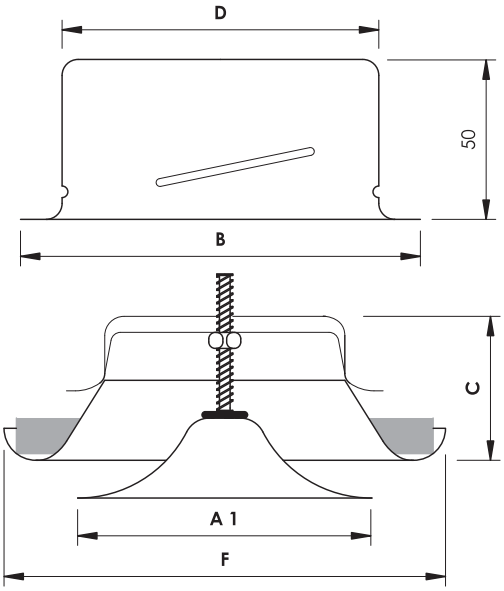

- Supply Disc Valve complete with its fixing collar.

Exhaust Disc Valve, Model EXH. D.V. METAL

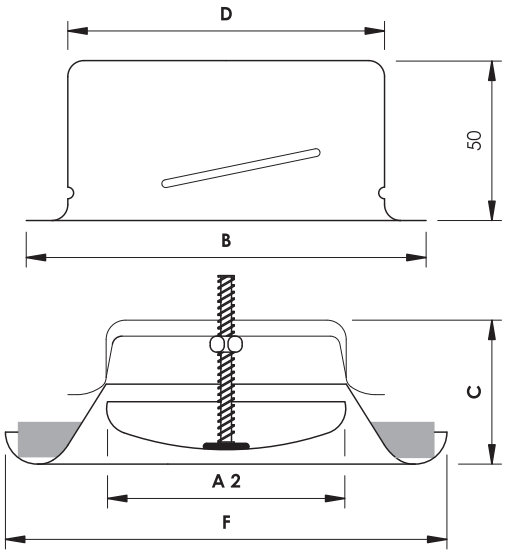

- Exhaust Disc Valve complete with its fixing collar.

TABLE DV - 02

NECK & OTHER DIMENSIONS FOR SUPPLY & EXHAUST DISC VALVES

Nominal / Listed Sizes		Dimensions in mm					
mm	Inch	D Ø	F Ø	A 1 Ø	A 2 Ø	B Ø	C
100 ø	4 " ø	99	138	92	75	125	40
150 ø	6 " ø	149	202	135	119	175	50
200 ø	8 " ø	199	248	194	157	225	63

- All Dimensions are in mm and subject to ± 2 mm tolerance.

Fixing Collar / Mounting Ring Details

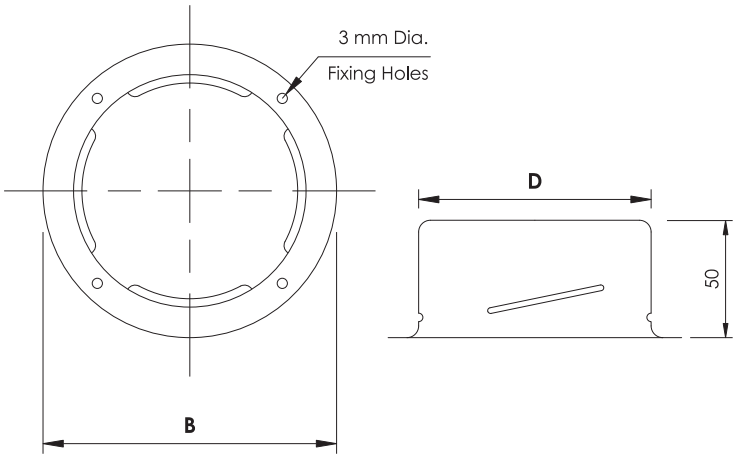

- Refer to previous page for sizes and dimensions details.

Mounting Instructions

Connection To Round Rigid Duct

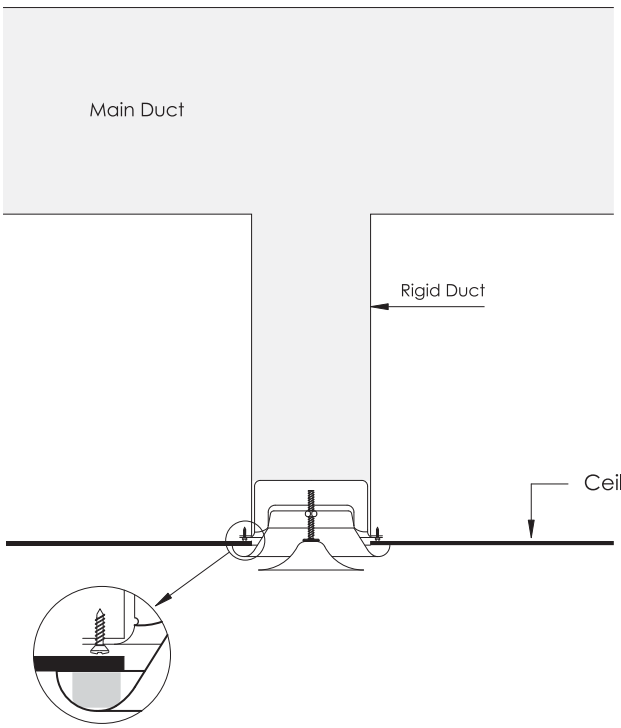

Connection To Round Flexible Duct

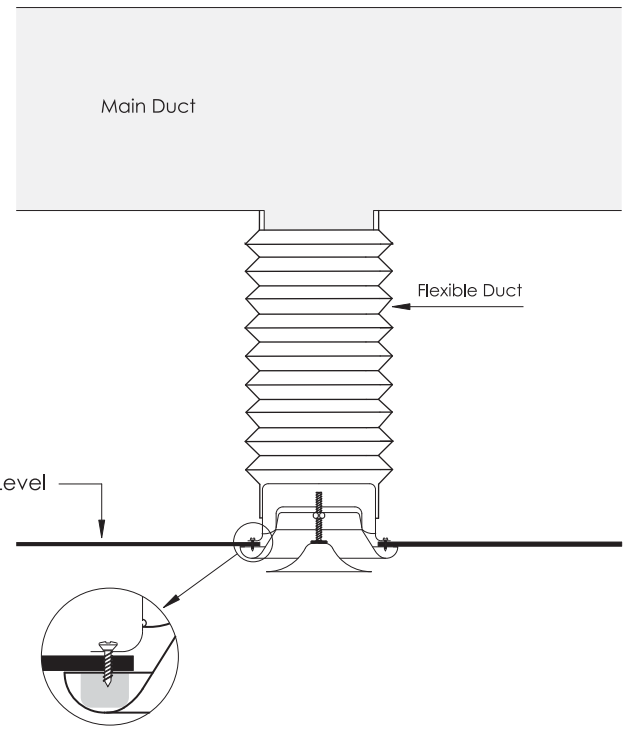

Ceiling Level

Engineering and Performance Data

Supply Disc Valve, Model SUPPLY D.V. METAL

Size 100 mm ⌀

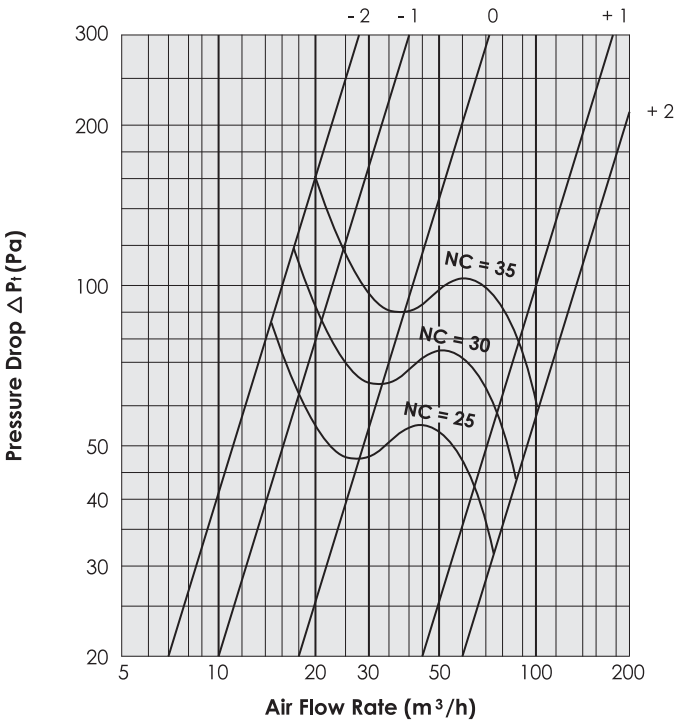

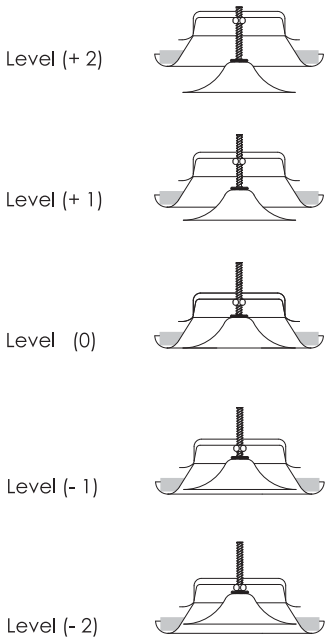

Exhaust Disc Valve, Model EXH. D.V. METAL

Size 100 mm ⌀

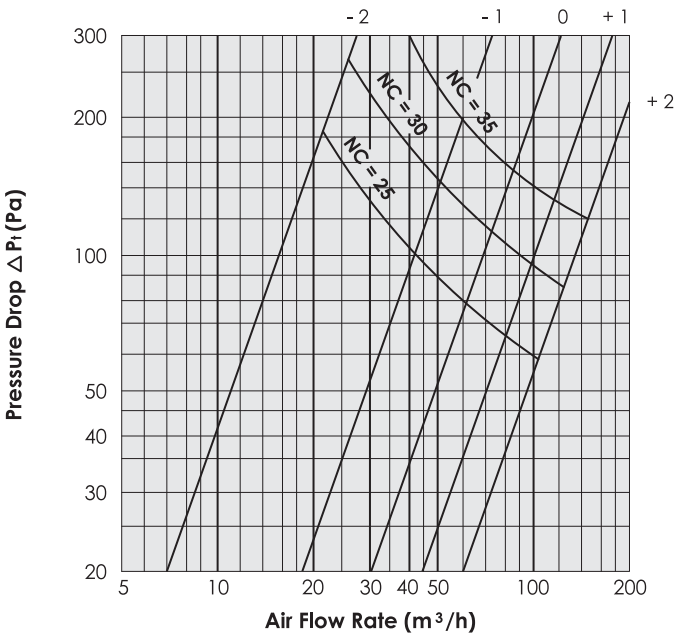

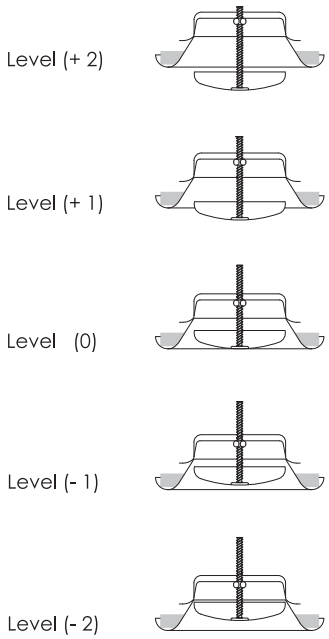

Engineering and Performance Data

Supply Disc Valve, Model SUPPLY D.V. METAL

Size 150 mm ⌀

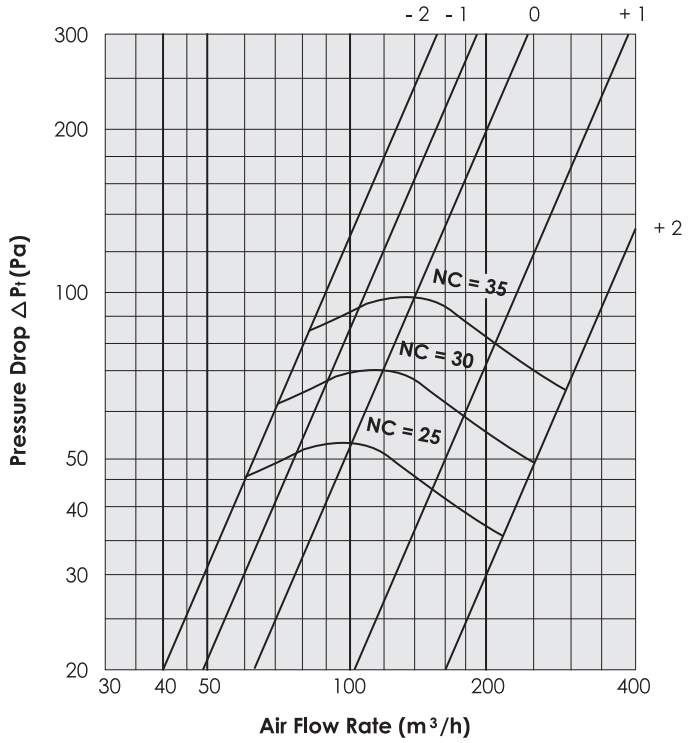

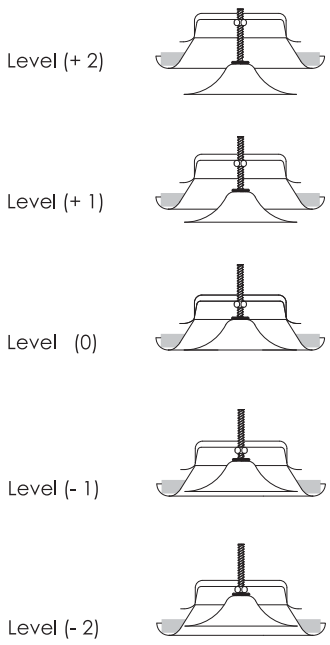

Exhaust Disc Valve, Model EXH. D.V. METAL

Size 150 mm ⌀

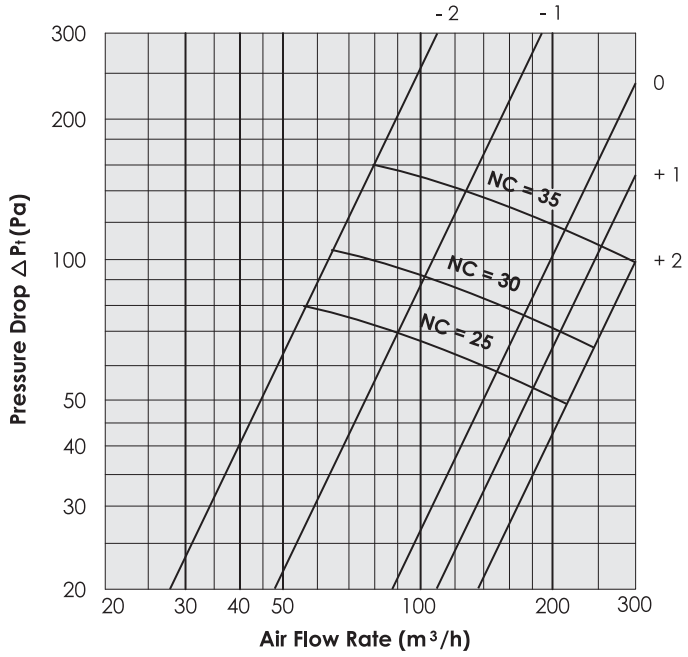

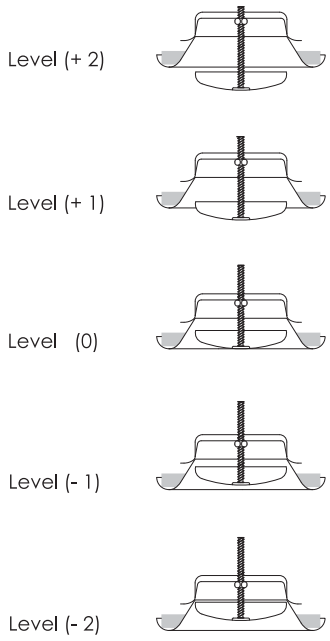

Engineering and Performance Data

Supply Disc Valve, Model SUPPLY D.V. METAL

Size 200 mm ⌀

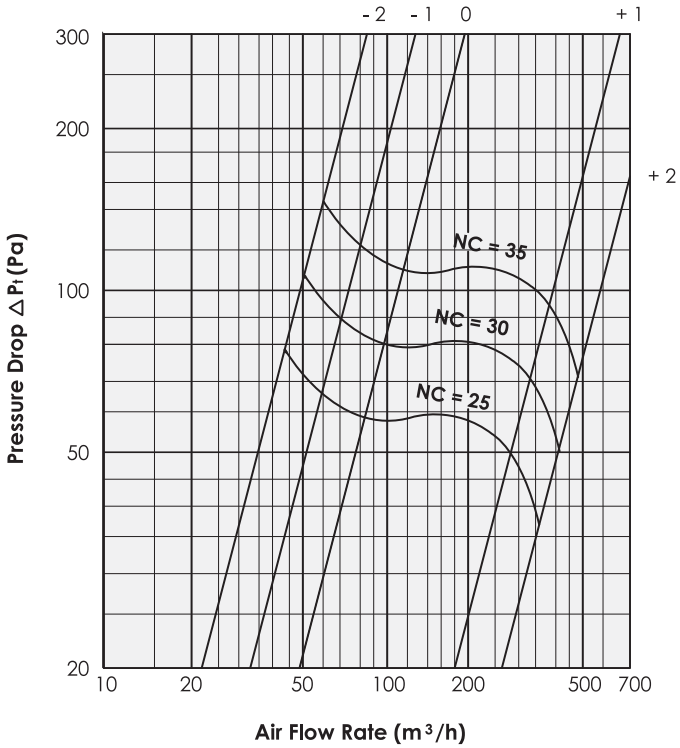

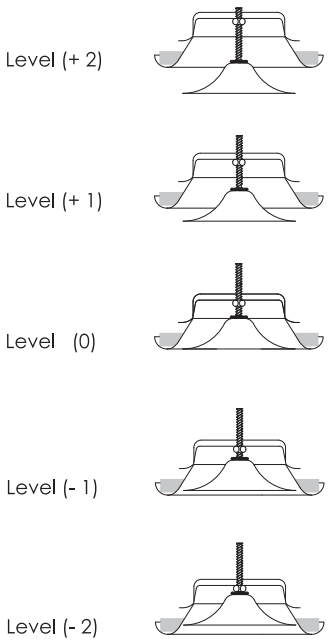

Exhaust Disc Valve, Model EXH. D.V. METAL

Size 200 mm ⌀

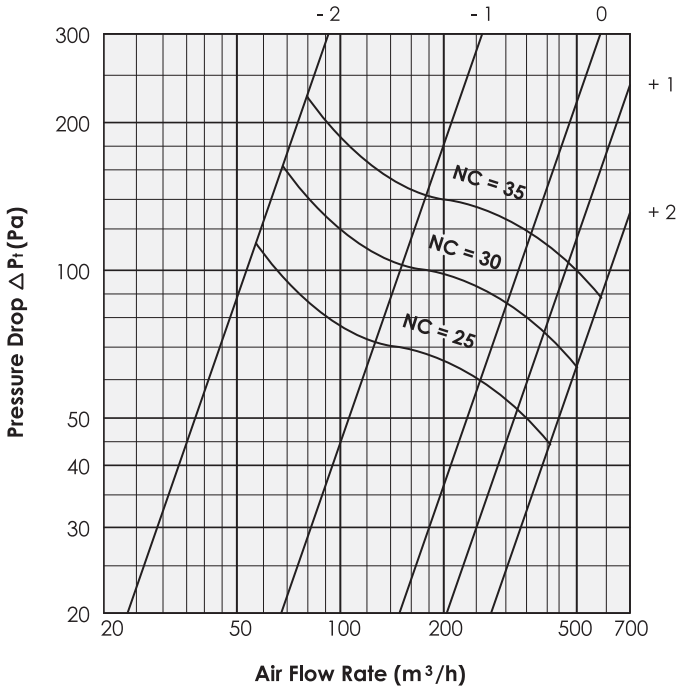

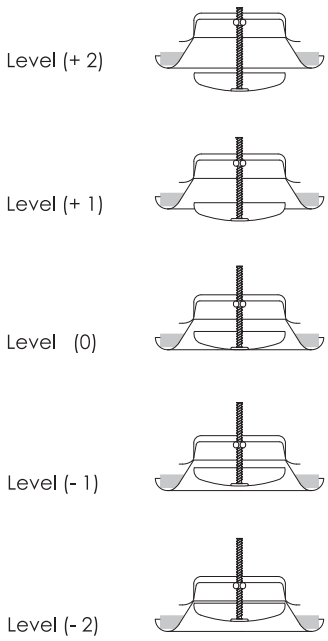

Ordering Data

- **Available Surface Finishes For Disc Valves :**
  - Powder Coated, Standard white color to RAL – 9010, other optional colors if required to be provided in RAL - No. only and charged extra.

- **Ordering Specifications :**

Specify :

1 . Disc Valve Description / Model (Supply or Exhaust).
2 . Nominal / Neck Diameter Size.
3 . Quantity.
4 . RAL – No. (colors other than RAL – 9010 to be charged extra).

Example 1 :

1	2	3	4
SUPPLY D.V. METAL	100 mm Ø 4 " Ø	25	9010 (standrad)

Example 2 :

1	2	3	4
EXH. D.V. METAL	150 mm Ø 6 " Ø	1500	9010 (standrad)

Example 3 :

1	2	3	4
EXH. D.V. METAL	200 mm Ø 8 " Ø	12	9016 (optional)

BEST CHOICE INDUSTRIES L.L.C.

MANUFACTURING CENTRAL AIR CONDITIONING AIR OUTLETS

Tel. : 04 - 88 55 422, Fax : 04 - 88 55 421, P.O. Box: 31567, Dubai - U. A. E. - E-mail: bcillc@emirates.net.ae

CHAPTER 12

VOLUME CONTROL DAMPERS

VOLUME CONTROL DAMPERS

VOLUME CONTROL DAMPERS

Model	VCD - F1
Shape	Square or Rectangular
Connection	Flanged Type
Blades Section	Double Skin Aerofoil
Blades Construction	Extruded Aluminium
Blades Operation	Manual (Parallal or Opposed)

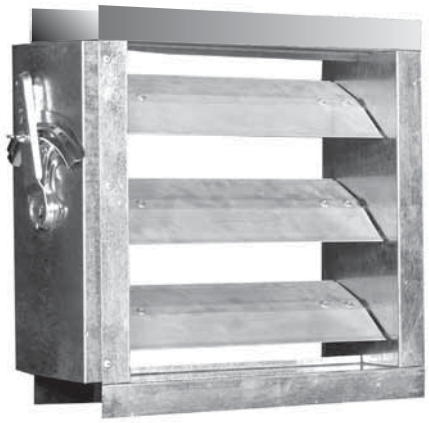

Features & Characterstics

- VCD – F1 single or multi – leaf dampers have been specifically designed for use in ventilation systems for volume, flow and pressure control in square and rectangular ducts and air handling units.
- Dampers are ruggedly built, with a casing of robust assembly formed from channel frame for flanged connection to ductwork.
- The blades design provides lower pressure drop in the open position for smooth air motion with reduced turbulence.
- Available in wide variety of standard duct sizes ranging from 100 x 100 mm up to 1200 x 1200 mm in 50 mm increments (other non – standard sizes are available on request.
- Any size combination with a height up to 150 mm is manufactured in single blade unit. Other sizes are manufactured in multi blades unit.

Construction Details

Frame : Galvanized steel , 16 or 18 gauge depending on damper size. Formed channel for flanged connection.

Flange Width : 30 mm (standard).

Blades : Extruded Aluminium, double skin with aerofoil section.

Finish :
Frame : Mill Galvanized.
Blades : Mill Aluminium.

Axle : Blades rotating around its centre by means of zinc plated steel connecting axle (Spindle).

Bearings : Blades are fixed with the frame by means of plastic bushes.

Linkage : Zinc plated steel side mounted linkage concealed inside the frame.

Blades Seal : As an option, blades rubber gasket seal at one edge is available on request to seal blade to blade joint for low air leakage operation.

Hand Locking Quadrant : Unless otherwise required, all dampers are equipped with external galvanized steel hand quadrant as standard to :
- Adjust damper opening position.
- Indicate damper opening position.
- Lock the blades at the desired position.

Also, dampers are available with extended steel shaft suitable for electrical actuator assembly.

Minimum Size : 100 x 100 mm.

Maximum Size : 1200 x 1200 mm as a single section. Multiple section assembly is unlimited where each section operates independently.

Model VCD - F1

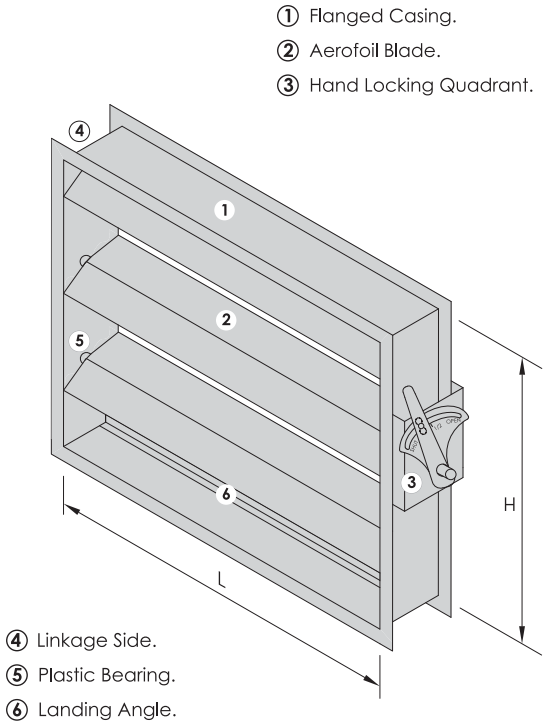

Blades and Linkage Operation

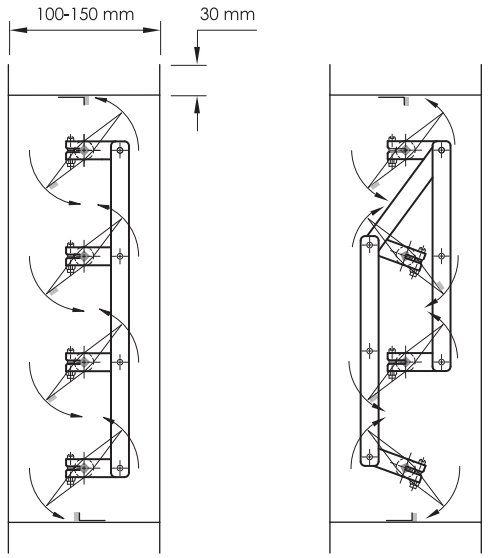

Parallal Blades (Side View)

Opposed Blades (Side View)

Engineering & Performance Data

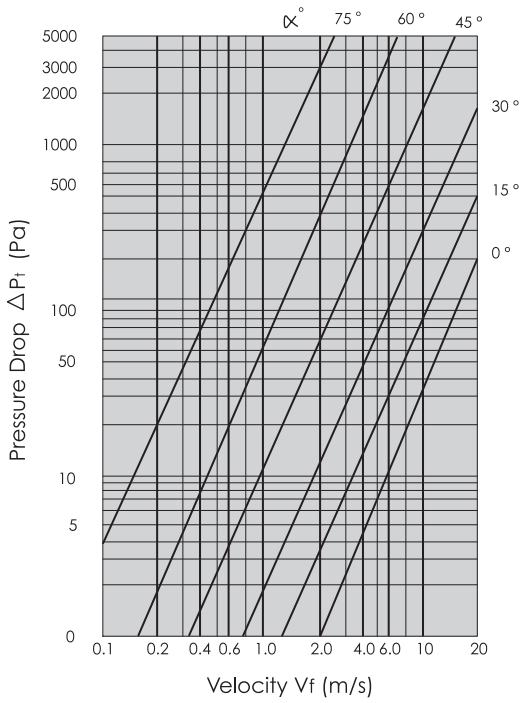

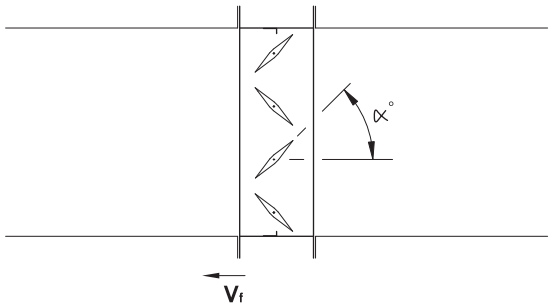

Δ Pt = Total Pressure Drop.
Vf = Face Velocity based on damper cross-sectional area.
α = Blades deflection angle, blades are fully open at α = 0 °.

VOLUME CONTROL DAMPERS

Model	VCD - F2
Shape	Square or Rectangular
Connection	Flanged Type
Blades Section	Double Skin Aerofoil
Blades Construction	Galvanized Steel
Blades Operation	Manual (Parallal or Opposed)

Features & Characterstics

- VCD – F2 single or multi – leaf dampers have been specifically designed for use in ventilation systems for volume, flow and pressure control in square and rectangular ducts and air handling units.
- Dampers are ruggedly built, with a casing of robust assembly formed from channel frame for flanged connection to ductwork.
- The blades design provides lower pressure drop in the open position for smooth air motion with reduced turbulence.
- Available in wide variety of standard duct sizes ranging from 100 x 100 mm up to 1200 x 1200 mm in 50 mm increments (other non – standard sizes are available on request.
- Any size combination with a height up to 250 mm is manufactured in single blade unit. Other sizes are manufactured in multi blades unit.

Construction Details

Frame : Galvanized steel , 16 or 18 gauge depending on damper size. Formed channel for flanged connection.

Flange Width : 30 mm (standard).

Blades : Galvanized steel sheet, double skin with aerofoil section.

Finish :
Frame : Mill Galvanized.
Blades : Mill Aluminium.

Axle : Blades rotating around its centre by means of zinc plated steel connecting axle (Spindle).

Bearings : Blades are fixed with the frame by means of plastic bushes.

Linkage : Zinc plated steel side mounted linkage concealed inside the frame.

Blades Seal : As an option, blades rubber gasket seal at one edge is available on request to seal blade to blade joint for low air leakage operation.

Hand Locking Quadrant : Unless otherwise required, all dampers are equipped with external galvanized steel hand quadrant as standard to :
- Adjust damper opening position.
- Indicate damper opening position.
- Lock the blades at the desired position.

Also, dampers are available with extended steel shaft suitable for electrical actuator assembly.

Minimum Size : 100 x 100 mm.

Maximum Size : 1200 x 1200 mm as a single section. Multiple section assembly is unlimited where each section operates independently.

Model VCD - F2

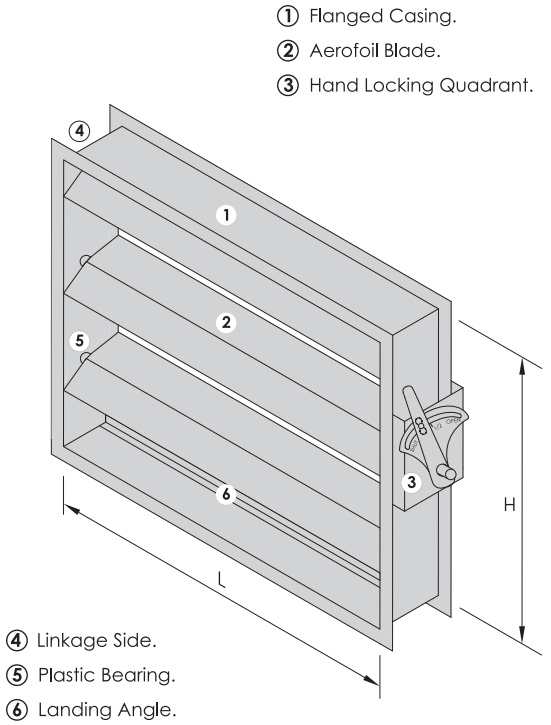

Blades and Linkage Operation

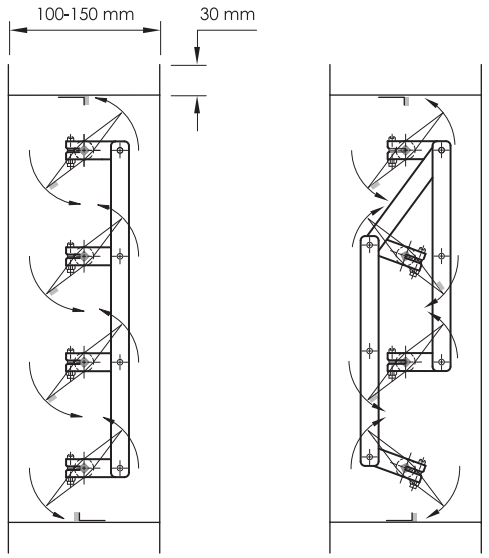

Parallal Blades (Side View)

Opposed Blades (Side View)

Engineering & Performance Data

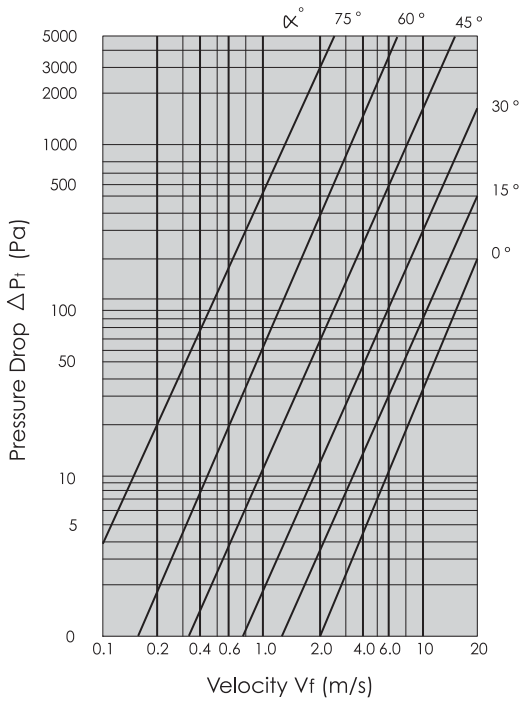

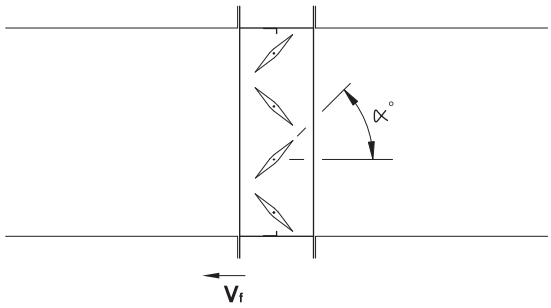

Δ Pt = Total Pressure Drop.
Vf = Face Velocity based on damper cross-sectional area.
α = Blades deflection angle, blades are fully open at α = 0 °.

VOLUME CONTROL DAMPERS

Model	VCD - F3
Shape	Square or Rectangular
Connection	Flanged Type
Blades Section	3V - Single Skin Blade
Blades Construction	Galvanized Steel
Blades Operation	Manual (Parallal or Opposed)

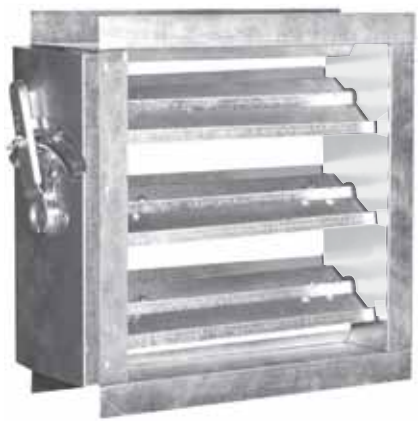

Features & Characterstics

- VCD – F3 single or multi – leaf dampers have been specifically designed for use in ventilation systems for volume, flow and pressure control in square and rectangular ducts and air handling units.
- Dampers are ruggedly built, with a casing of robust assembly formed from channel frame for flanged connection to ductwork.
- The blades design provides lower pressure drop in the open position for smooth air motion with reduced turbulence.
- Available in wide variety of standard duct sizes ranging from 100 x 100 mm up to 1200 x 1200 mm in 50 mm increments (other non – standard sizes are available on request.
- Any size combination with a height up to 250 mm is manufactured in single blade unit. Other sizes are manufactured in multi blades unit.

Construction Details

Fame : Galvanized steel , 16 or 18 gauge depending on damper size. Formed channel for flanged connection.

Flange Width : 30 mm (standard).

Blades : Galvanized steel sheet, " 3V " formed, single skin blades.

Finish :
Frame : Mill Galvanized.
Blades : Mill Galvanized.

Axle : Blades rotating around its centre by means of zinc plated steel stud.

Bearings : Blades are fixed with the frame by means of plastic bushes.

Linkage : Zinc plated steel side mounted linkage concealed inside the frame.

Blades Seal : As an option, blades rubber gasket seal at one edge is available on request to seal blade to blade joint for low air leakage operation.

Hand Locking Quadrant : Unless otherwise required, all dampers are equipped with external galvanized steel hand quadrant as standard to :
- Adjust damper opening position.
- Indicate damper opening position.
- Lock the blades at the desired position.

Also, dampers are available with extended steel shaft suitable for electrical actuator assembly.

Minimum Size : 100 x 100 mm.

Maximum Size : 1200 x 1200 mm as a single section. Multiple section assembly is unlimited where each section operates independently.

Model VCD - F3

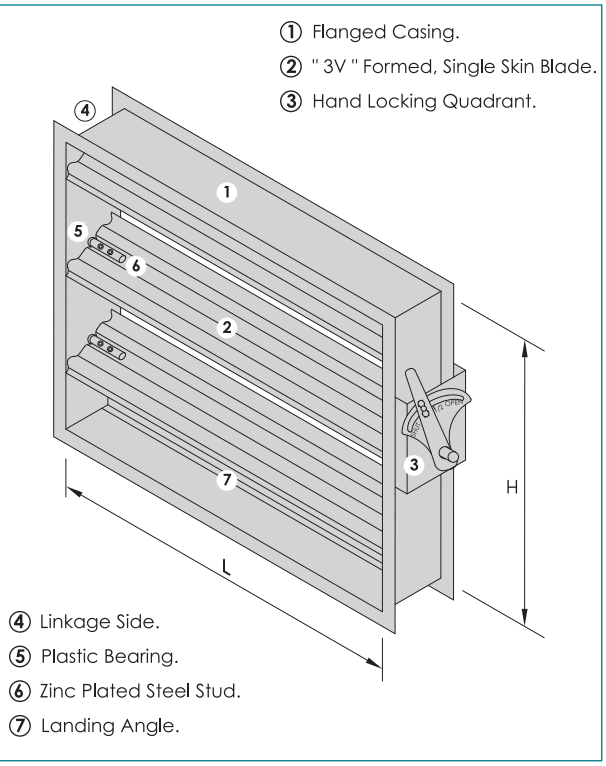

Blades and Linkage Operation

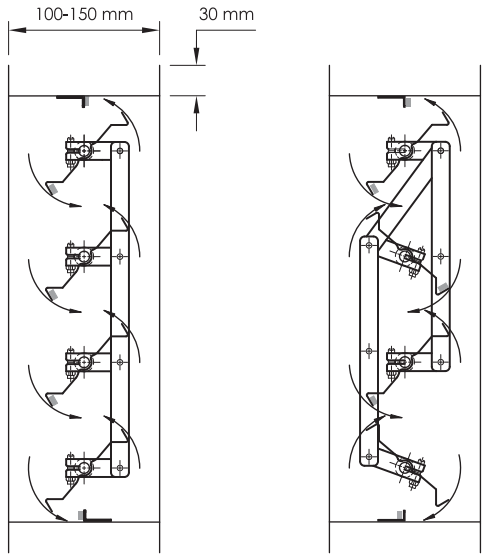

Parallal Blades (Side View)

Opposed Blades (Side View)

Engineering & Performance Data

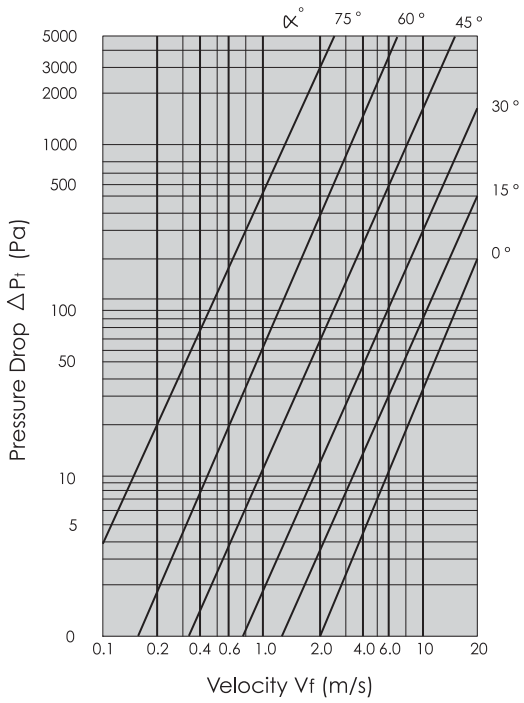

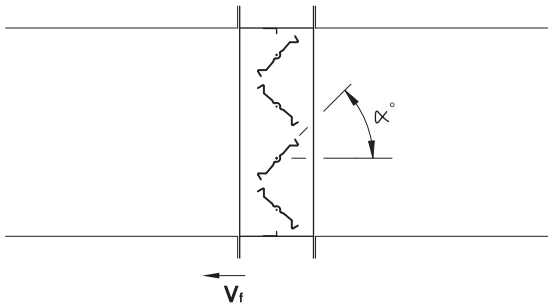

Δ Pt = Total Pressure Drop.
Vf = Face Velocity based on damper cross-sectional area.
α = Blades deflection angle, blades are fully open at α = 0 °.

VOLUME CONTROL DAMPERS

Model	VCD - S1
Shape	Square or Rectangular
Connection	Slip & Clip Type
Blades Section	Double Skin Aerofoil
Blades Construction	Extruded Aluminium
Blades Operation	Manual (Parallal or Opposed)

Features & Characterstics

- VCD – S1 single or multi – leaf dampers have been specifically designed for use in ventilation systems for volume, flow and pressure control in square and rectangular ducts and air handling units.
- Dampers are ruggedly built, with a casing of robust assembly formed from channel frame for flanged connection to ductwork.
- The blades design provides lower pressure drop in the open position for smooth air motion with reduced turbulence.
- Available in wide variety of standard duct sizes ranging from 100 x 100 mm up to 1200 x 1200 mm in 50 mm increments (other non – standard sizes are available on request.
- Any size combination with a height up to 150 mm is manufactured in single blade unit. Other sizes are manufactured in multi blades unit.

Construction Details

Frame : Galvanized steel , 16 or 18 gauge depending on damper size. Formed for Slip and Clip connection to ductwork.

Blades : Extruded Aluminium, double skin with aerofoil section.

Finish :
Frame : Mill Galvanized.
Blades : Mill Aluminium.

Axle : Blades rotating around its centre by means of zinc plated steel connecting axle (Spindle).

Bearings : Blades are fixed with the frame by means of plastic bushes.

Linkage : Zinc plated steel side mounted linkage concealed outside the frame.

Blades Seal : As an option, blades rubber gasket seal at one edge is available on request to seal blade to blade joint for low air leakage operation.

Hand Locking Quadrant : Unless otherwise required, all dampers are equipped with external galvanized steel hand quadrant as standard to :
- Adjust damper opening position.
- Indicate damper opening position.
- Lock the blades at the desired position.

Also, dampers are available with extended steel shaft suitable for electrical actuator assembly.

Minimum Size : 100 x 100 mm.

Maximum Size : 1200 x 1200 mm as a single section. Multiple section assembly is unlimited where each section operates independently.

Model VCD - S1

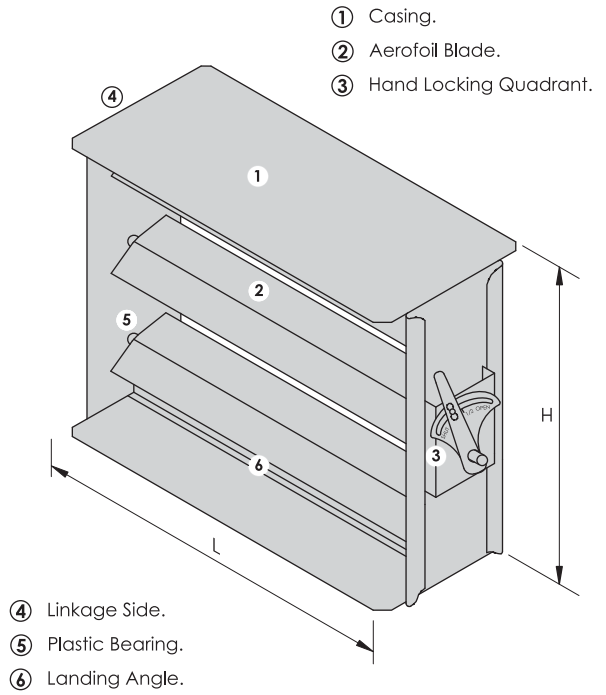

Blades and Linkage Operation

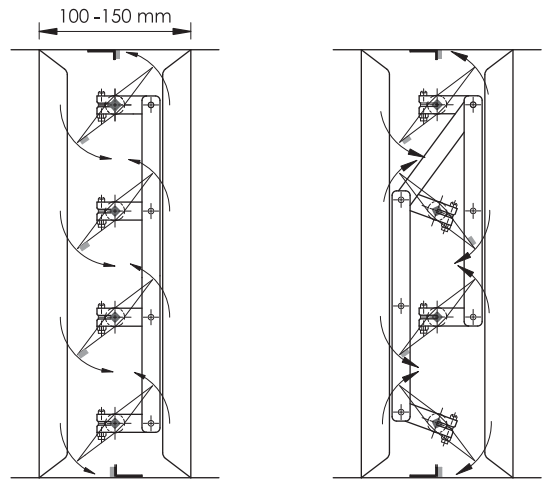

Parallal Blades (Side View)

Opposed Blades (Side View)

Engineering & Performance Data

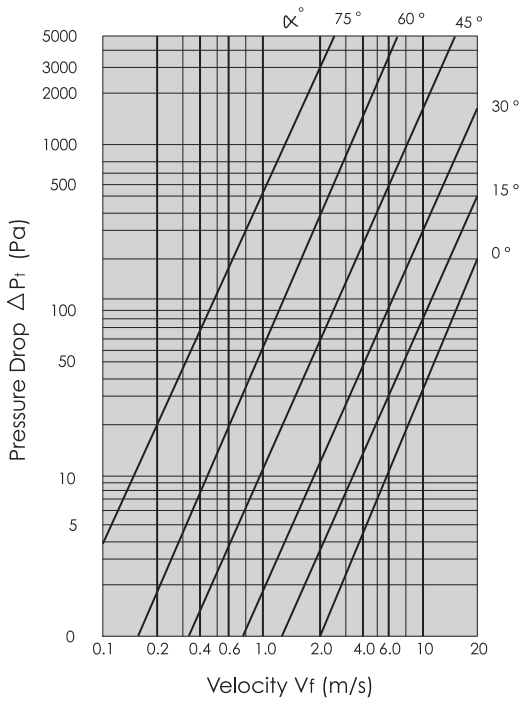

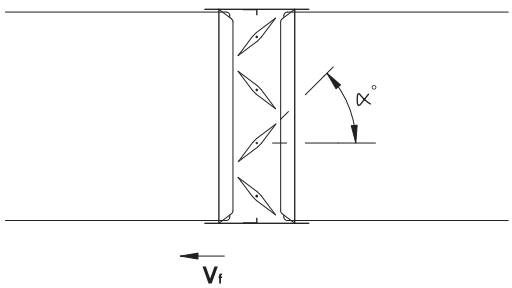

Δ Pt = Total Pressure Drop.
Vf = Face Velocity based on damper cross-sectional area.
α = Blades deflection angle, blades are fully open at α = 0 °.

VOLUME CONTROL DAMPERS

Model	VCD - S2
Shape	Square or Rectangular
Connection	Slip & Clip Type
Blades Section	Double Skin Aerofoil
Blades Construction	Galvanized Steel
Blades Operation	Manual (Parallal or Opposed)

Features & Characterstics

- VCD – S2 single or multi – leaf dampers have been specifically designed for use in ventilation systems for volume, flow and pressure control in square and rectangular ducts and air handling units.
- Dampers are ruggedly built, with a casing of robust assembly formed from channel frame for flanged connection to ductwork.
- The blades design provides lower pressure drop in the open position for smooth air motion with reduced turbulence.
- Available in wide variety of standard duct sizes ranging from 100 x 100 mm up to 1200 x 1200 mm in 50 mm increments (other non – standard sizes are available on request.
- Any size combination with a height up to 250 mm is manufactured in single blade unit. Other sizes are manufactured in multi blades unit.

Construction Details

Frame : Galvanized steel , 16 or 18 gauge depending on damper size. Formed for Slip and Clip connection to ductwork.

Blades : Galvanized steel sheet, double skin with aerofoil section.

Finish :
Frame : Mill Galvanized.
Blades : Mill Galvanized.

Axle : Blades rotating around its centre by means of zinc plated steel connecting axle (Spindle).

Bearings : Blades are fixed with the frame by means of plastic bushes.

Linkage : Zinc plated steel side mounted linkage concealed outside the frame.

Blades Seal : As an option, blades rubber gasket seal at one edge is available on request to seal blade to blade joint for low air leakage operation.

Hand Locking Quadrant : Unless otherwise required, all dampers are equipped with external galvanized steel hand quadrant as standard to :
- Adjust damper opening position.
- Indicate damper opening position.
- Lock the blades at the desired position.

Also, dampers are available with extended steel shaft suitable for electrical actuator assembly.

Minimum Size : 100 x 100 mm.

Maximum Size : 1200 x 1200 mm as a single section. Multiple section assembly is unlimited where each section operates independently.

Model VCD - S2

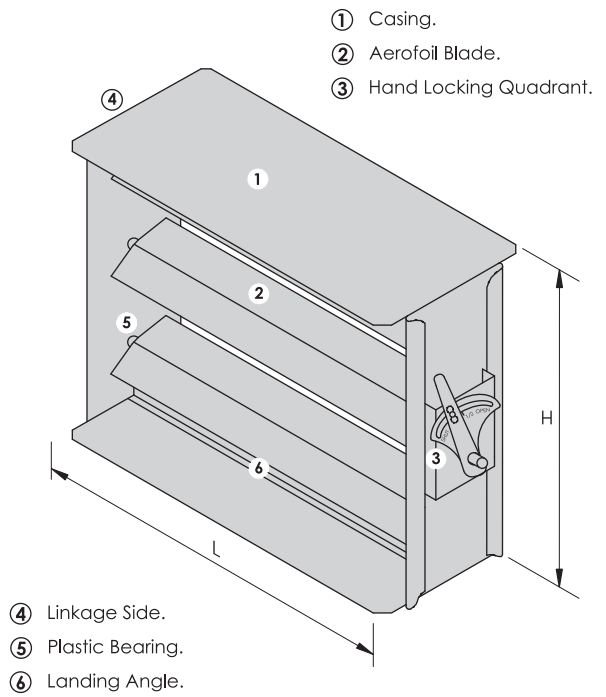

Blades and Linkage Operation

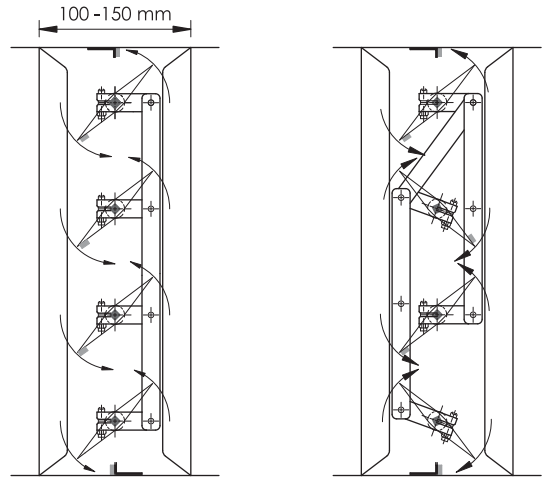

Parallal Blades (Side View)

Opposed Blades (Side View)

Engineering & Performance Data

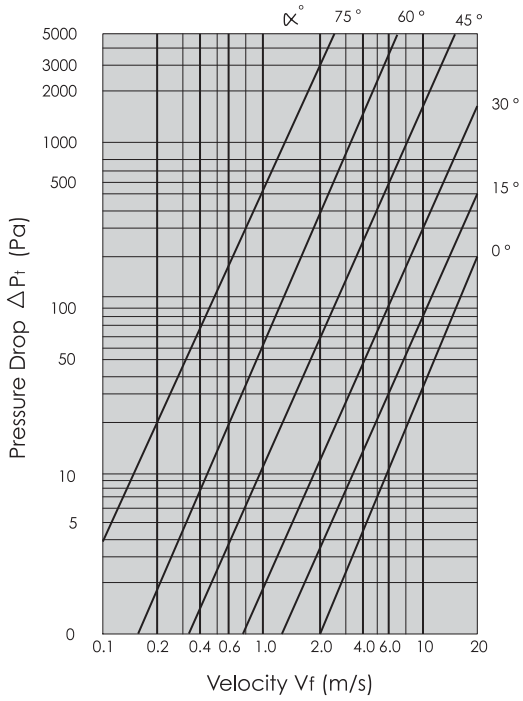

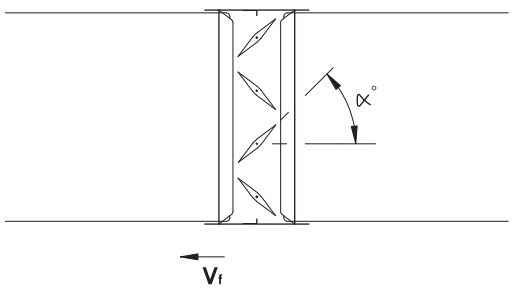

Δ Pt = Total Pressure Drop.
Vf = Face Velocity based on damper cross-sectional area.
α = Blades deflection angle, blades are fully open at α = 0 °.

VOLUME CONTROL DAMPERS

Model	VCD - S3
Shape	Square or Rectangular
Connection	Slip & Clip Type
Blades Section	3V - Single Skin Blade
Blades Construction	Galvanized Steel
Blades Operation	Manual (Parallal or Opposed)

Features & Characterstics

- VCD – S3 single or multi – leaf dampers have been specifically designed for use in ventilation systems for volume, flow and pressure control in square and rectangular ducts and air handling units.
- Dampers are ruggedly built, with a casing of robust assembly formed from channel frame for flanged connection to ductwork.
- The blades design provides lower pressure drop in the open position for smooth air motion with reduced turbulence.
- Available in wide variety of standard duct sizes ranging from 100 x 100 mm up to 1200 x 1200 mm in 50 mm increments (other non – standard sizes are available on request.
- Any size combination with a height up to 250 mm is manufactured in single blade unit. Other sizes are manufactured in multi blades unit.

Construction Details

Frame : Galvanized steel , 16 or 18 gauge depending on damper size. Formed for Slip and Clip connection to ductwork.

Blades : Galvanized steel sheet, " 3V " formed, single skin blades.

Finish :
Frame : Mill Galvanized.
Blades : Mill Galvanized.

Axle : Blades rotating around its axis by means of zinc plated steel stud.

Bearings : Blades are fixed with the frame by means of plastic bushes.

Linkage : Zinc plated steel side mounted linkage concealed in the frame.

Blades Seal : As an option, blades rubber gasket seal at one edge is available on request to seal blade to blade joint for low air leakage operation.

Hand Locking Quadrant : all dampers are equipped with external galvanized steel hand quadrant to :
- Adjust damper opening position.
- Indicate damper opening position.
- Lock the blades at the desired position.

Also, dampers are available with extended steel shaft suitable for electrical actuator assembly.

Minimum Size : 100 x 100 mm.

Maximum Size : 1200 x 1200 mm as a single section. Multiple section assembly is unlimited where each section operates independently.

Model VCD - S3

① Casing.
② " 3V " Formed, Single Skin Blade.
③ Hand Locking Quadrant.

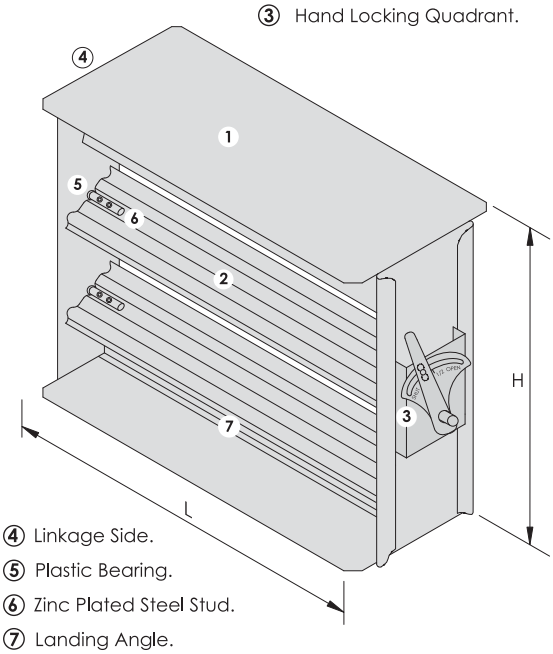

④ Linkage Side.
⑤ Plastic Bearing.
⑥ Zinc Plated Steel Stud.
⑦ Landing Angle.

Blades and Linkage Operation

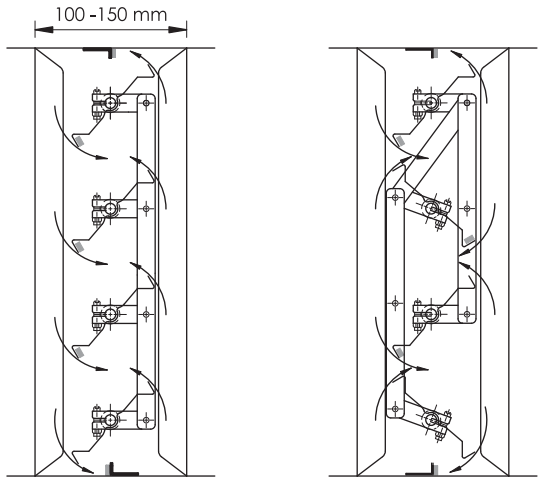

Parallal Blades (Side View)

Opposed Blades (Side View)

Engineering & Performance Data

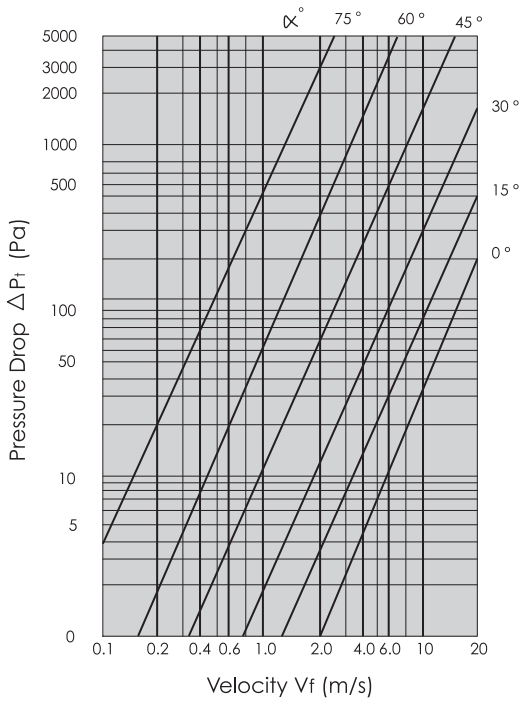

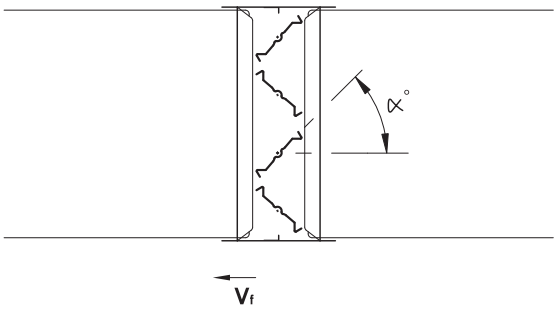

Δ Pt = Total Pressure Drop.
Vf = Face Velocity based on damper cross-sectional area.
α = Blades deflection angle, blades are fully open at α = 0 °.

VOLUME CONTROL DAMPERS

Model	VCD - R
Shape	Round (Circular)
Connection	Open Ends w/o Flanges
Type of Ends	Grooved or Straight
Blade Section	Single Skin Blade
Blade Construction	Galvanized Steel

Features & Characterstics

- VCD – R round type volume control dampers have been specifically designed for the use in circular duct installations and at the connections between flexible ducts and the inlets of supply air plenums to regulate air flow and control pressure.
- Also these dampers can be used as Shut – Off dampers when sealing against air flow is required.
- Available with open :
  - Grooved Ends or,
  - Straight Ends.
- Available in wide variety of standard duct sizes ranging from 100 mm Ø up to 600 mm Ø in 50 mm increments.

Construction Details

Casing : Galvanized steel , 18 or 20 gauge depending on damper size. Circular formed for circular duct connections.

Ends Type : Open Grooved Ends or,
Open Straight Ends.

Blade : Galvanized steel sheet, circular formed, single skin blade.

Finish :
Casing : Mill Galvanized.
Blade : Mill Galvanized.

Axle : Blade rotating around its centre by means of zinc plated steel connecting axle (Spindle).

Bearings : Blade are fixed with the frame by means of plastic bushes.

Hand Locking Quadrant : Unless otherwise required, all dampers are equipped with external galvanized steel hand quadrant as standard to :
- Adjust damper opening position.
- Indicate damper opening position.
- Lock the blades at the desired position.

Also, dampers are available with extended steel shaft suitable for electrical actuator assembly.

Minimum Size : 100 mm Ø.
Maximum Size : 600 mm Ø.

Model VCD - R

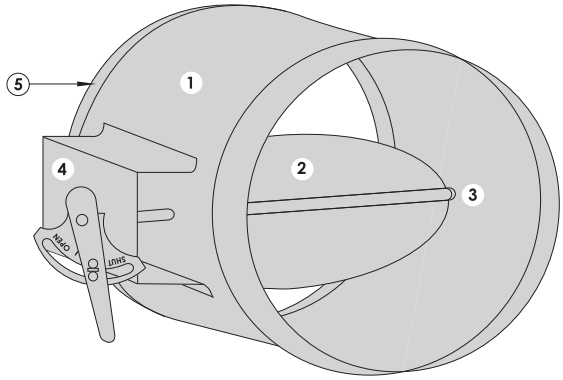

① Casing.
② Blade.
③ Plastic Bearing.
④ Hand Locking Quadrant.
⑤ Groove.

Type of Ends and Connections

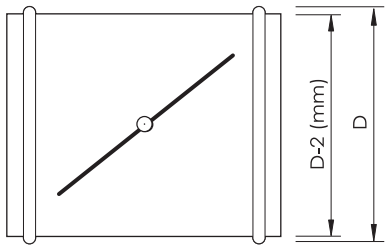

Open Grooved Ends

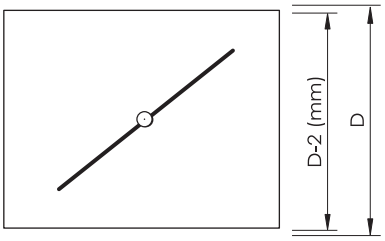

Open Straight Ends

D : Duct diameter Size in (mm).

Engineering & Performance Data

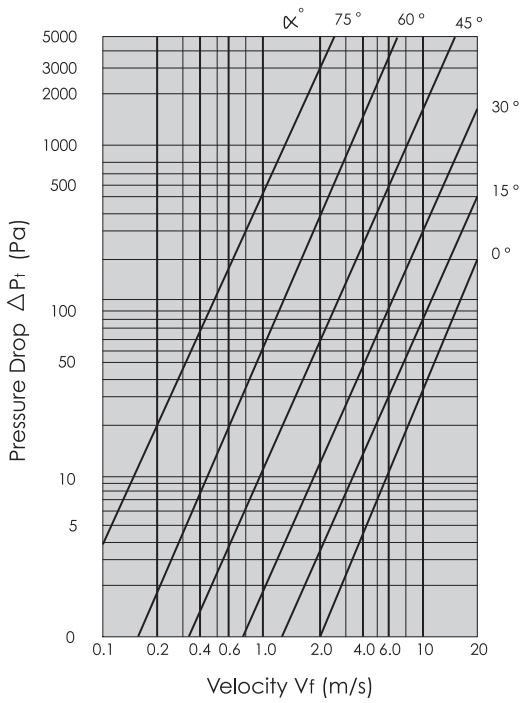

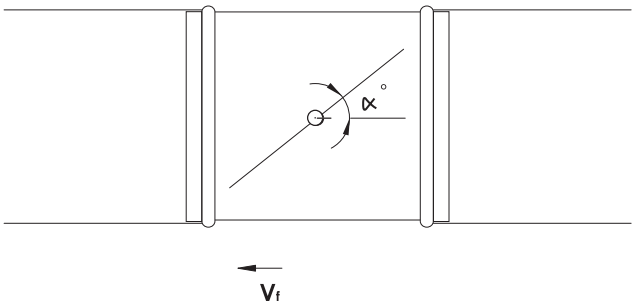

Δ Pt = Total Pressure Drop.
Vf = Face Velocity based on damper cross-sectional area.
∝ = Blade deflection angle, blade are fully open at ∝ = 0 °.

Ordering Data

- **Ordering Specifications :**

Specify :

1 . VCD – Model (VCD-F1,F2,F3,S1,.....etc).
2 . Duct Size.
3 . Quantity.
4 . Blades operation, Parallel or Opposed type(this specification is not applicable for the Model VCD-R).
5 . Type of Ends, Grooved or Straight (only mention for the Model VCD-R).
6 . Blades Seal Rubber Gasket (Optional Accessories).

Example 1 :

1	2	3	4	5	6
VCD-FI	12" x 8" 300 x 200 (mm)	22	Parallel	–	–

Example 2 :

1	2	3	4	5	6
VCD-S1	24" x 16" 600 x 400 (mm)	5	Opposed	–	With Blades Seal

Example 3 :

1	2	3	4	5	6
VCD-R	10 " Ø 250 mm Ø	30	–	Grooved Ends	–

BEST CHOICE INDUSTRIES L.L.C.

MANUFACTURING CENTRAL AIR CONDITIONING AIR OUTLETS

Tel. : 04 - 88 55 422, Fax : 04 - 88 55 421, P.O. Box: 31567, Dubai - U. A. E. - E-mail: bcillc@emirates.net.ae

CHAPTER 13

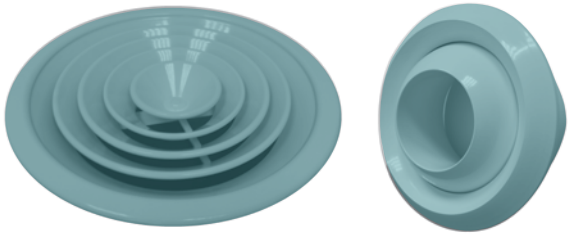

OTHER AIROUTLETS

OTHER AIROUTLETS

BCi

CIRCULAR CEILING DIFFUSER (FIXED CORE)

Model CSCD C/W BFD (FIXED CORE)

This model of circular Diffuser is totally different in its design, construction & concept from our one mentioned in chapter # 10. In this model core (Inner cones) is :

- Fixed.
- Flushed to the frame.
- Can't be adjusted vertically up or down.
- But still removable from the face.

Each diffuser already equipped with ABS (plastic) butterfly damper in black color as standard.

Features & Characteristics :

- Frame & inner cones (core) are made of high quality Aluminum sheet pressed to give the circular shape.
- Damper (Butterfly type): made of ABS (plastic) in black color.
- The inner cones (core) are designed in conical shape, modern styling & easy removable allowing for easy installation, balancing, cleaning, damper adjustment & access to duct system.
- Available in 5 standard sizes ranging from 150 mm to 350 mm Ø in 50 mm increments.
- Provided with standard sealing sponge gasket fixed backside of each diffuser.
- Provided with G.I. assembly bridge & screws for easy installation.
- Good for installations between 2.6 to 4.1 mtr height.

OPERATING RANGE & QUICK SELECTION TABLE		
Nominal Neck size (N)		CFM Range
mm	Inch	
150 Ø	6" Ø	60 to 200
200 Ø	8 " Ø	120 to 320
250 Ø	10" Ø	180 to 470
300 Ø	12" Ø	240 to 630
350 Ø	14" Ø	300 to 820

- @ Max 40 dBA.

CIRCULAR CEILING DIFFUSER (Fixed core)

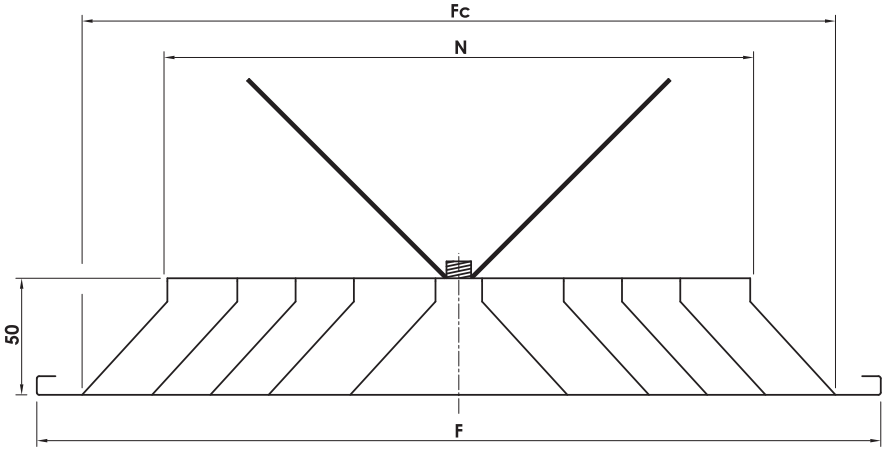

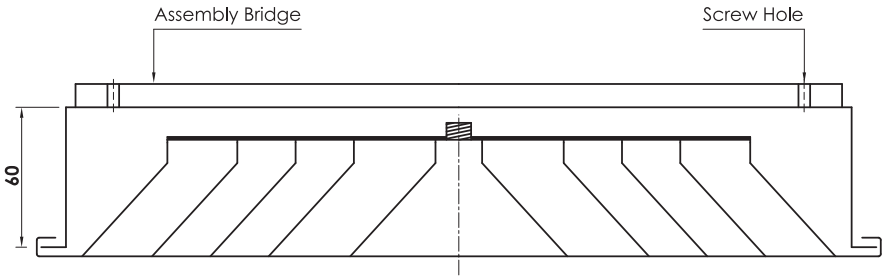

NECK & OTHER DIMENSIONS				
Nominal Neck size (N)		Dimensions in mm		No. of cones
mm	Inch	F Ø	Fc Ø	
150 Ø	6" Ø	262	214	2
200 Ø	8 " Ø	304	256	3
250 Ø	10" Ø	362	314	4
300 Ø	12" Ø	401	353	5
350 Ø	14" Ø	452	404	6

- All Dimensions are in mm and subject to ± 2mm tolerance.

CIRCULAR CEILING DIFFUSER (Fixed core)

Engineering & Performance Data

TABULAR SELECTION FOR CSCD C/W BFD (FIXED CORE)

CFM	SIZE ▶	150 mm	200 mm	250 mm	300 mm	350 mm
60	Vel	2.75	1.20	0.77	0.54	0.40
	Δ P	0.70	0.28	0.23	0.21	0.20
	Th. min	0.50	0.33	0.27	0.22	0.19
	Th. max	0.92	0.70	0.61	0.55	0.51
	dbA	< 15	< 15	< 15	< 15	< 15
90	Vel	4.12	1.79	1.16	0.81	0.60
	Δ P	1.33	0.40	0.28	0.23	0.21
	Th. min	0.75	0.49	0.40	0.33	0.29
	Th. max	1.25	0.92	0.79	0.70	0.64
	dbA	< 15	< 15	< 15	< 15	< 15
120	Vel	5.50	2.39	1.55	1.08	0.81
	Δ P	2.22	0.57	0.35	0.27	0.23
	Th. min	1.00	0.66	0.53	0.44	0.38
	Th. max	1.59	1.13	0.96	0.85	0.77
	dbA	< 15	< 15	< 15	< 15	< 15
150	Vel	6.87	2.99	1.94	1.35	1.01
	Δ P	3.37	0.79	0.44	0.31	0.26
	Th. min	1.24	0.82	0.66	0.55	0.48
	Th. max	1.92	1.35	1.14	0.99	0.89
	dbA	32	18	< 15	< 15	< 15
180	Vel	8.25	3.59	2.32	1.61	1.21
	Δ P	4.77	1.05	0.55	0.36	0.29
	Th. min	1.49	0.99	0.79	0.66	0.57
	Th. max	2.25	1.57	1.32	1.14	1.02
	dbA	37	24	< 15	< 15	< 15
210	Vel	9.62	4.18	2.71	1.88	1.41
	Δ P	6.42	1.37	0.68	0.43	0.32
	Th. min	1.74	1.15	0.93	0.77	0.67
	Th. max	2.58	1.79	1.49	1.29	1.15
	dbA	41	28	18	< 15	< 15
240	Vel	10.99	4.78	3.10	2.15	1.61
	Δ P	8.33	1.73	0.83	0.50	0.36
	Th. min	1.99	1.31	1.06	0.88	0.76
	Th. max	2.91	2.01	1.67	1.43	1.28
	dbA	45	32	21	< 15	< 15
270	Vel	12.37	5.38	3.49	2.42	1.81
	Δ P	10.50	2.14	1.01	0.58	0.41
	Th. min	2.24	1.48	1.19	0.99	0.86
	Th. max	3.24	2.23	1.84	1.58	1.40
	dbA	48	35	25	16	< 15
300	Vel		5.98	3.87	2.69	2.02
	Δ P		2.60	1.20	0.67	0.46
	Th. min		1.64	1.32	1.10	0.95
	Th. max		2.45	2.02	1.73	1.53
	dbA		38	28	19	< 15
360	Vel		7.17	4.65	3.23	2.42
	Δ P		3.66	1.64	0.89	0.58
	Th. min		1.97	1.59	1.32	1.14
	Th. max		2.88	2.37	2.02	1.78
	dbA		43	33	24	17

CFM	SIZE ▶	150 mm	200 mm	250 mm	300 mm	350 mm
420	Vel		8.37	5.42	3.37	2.82
	Δ P		4.91	2.17	1.14	0.72
	Th. min		2.30	1.85	1.54	1.33
	Th. max		3.32	2.72	2.31	2.04
	dbA		47	37	29	21
480	Vel			6.20	4.31	3.22
	Δ P			2.78	1.44	0.89
	Th. min			2.11	1.76	1.52
	Th. max			3.08	2.61	2.29
	dbA			41	32	25
540	Vel			6.97	4.84	3.67
	Δ P			3.47	1.77	1.07
	Th. min			2.38	1.98	1.72
	Th. max			3.43	2.90	2.55
	dbA			44	36	29
600	Vel			7.75	5.38	4.03
	Δ P			4.23	2.14	1.28
	Th. min			2.64	2.20	1.91
	Th. max			3.78	3.19	2.80
	dbA			8.52	39	32
660	Vel			5.08	5.92	4.43
	Δ P			2.91	2.55	1.51
	Th. min			4.13	2.42	2.10
	Th. max			50	3.49	3.05
	dbA				41	34
720	Vel				6.46	4.84
	Δ P				3.00	1.76
	Th. min				2.64	2.29
	Th. max				3.78	3.31
	dbA				44	37
780	Vel				7.00	5.24
	Δ P				3.49	2.04
	Th. min				2.86	2.48
	Th. max				4.07	3.56
	dbA				46	39
900	Vel					6.05
	Δ P					2.65
	Th. min					2.86
	Th. max					4.07
	dbA					43
1,000	Vel					6.85
	Δ P					3.35
	Th. min					3.24
	Th. max					4.58
	dbA					46
1,200	Vel					7.66
	Δ P					4.14
	Th. min					3.62
	Th. max					5.08
	dbA					50

Vel = Velocity (m/s)
Δ P = Pressure Drop (mm. wg)
Th. min = Throw, Minimum (m)
Th. max = Throw, Maximum (m)
dbA = Noise level (dbA)

Model : JET NOZZLE DIFFUSER (BALL TYPE)

The ball type Jet Nozzles with variable diffusion directions are particularly designed for Air Conditioning systems which require long concentrated throws in order to reach areas which are distant from the duct system or hidden by structural elements.

Jet Nozzles of ball type can be utilized for both vertical & horizontal air diffusion, thanks for their easy orientation in all directions around 360°, also the minimum construction tolerance & an accurate smooth finish of the spherical body together with its surrounding ring guarantees easy & precise movement.

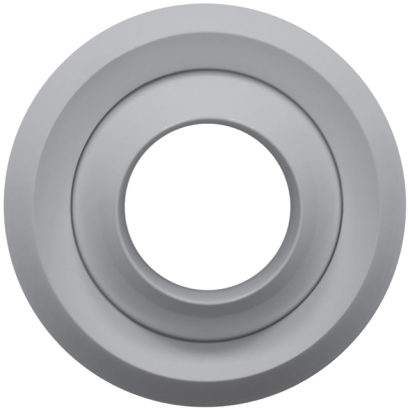

Features & Characteristics :

- Spherical body & its ring are made of high quality Aluminum sheet pressed to give the ball shape.
- The ball can be oriented around 360°.
- Fixing ring is provided with holes for easy screw installation.
- An extra covering ring is provided to conceal the fixing screws (turning this ring clockwise is only what you need to fit it in place).
- The built in circular neck provided at the backside of each diffuser allows for easy connection to flexible duct.
- A double felt seal between the ball body & its ring permits a perfect seal & a self locking position once desired angle has been chosen.
- Available in five standard sizes 150, 200, 250, 315 & 400 Ø mm.
- Good for installations between 2.8 to 30 mtr height.

JET NOZZLE DIFFUSER (BALL TYPE)

Nominal Size (N)	Neck & other Dimensions				
	N Ø	D Ø	F Ø	A	B
150 Ø	145	75	198	80	23
200 Ø	198	105	261	105	30
250 Ø	247	130	316	135	35
315 Ø	314	162	392	170	40
400 Ø	398	210	495	215	55

- All Dimensions are in mm and subject to ± 2mm tolerance.

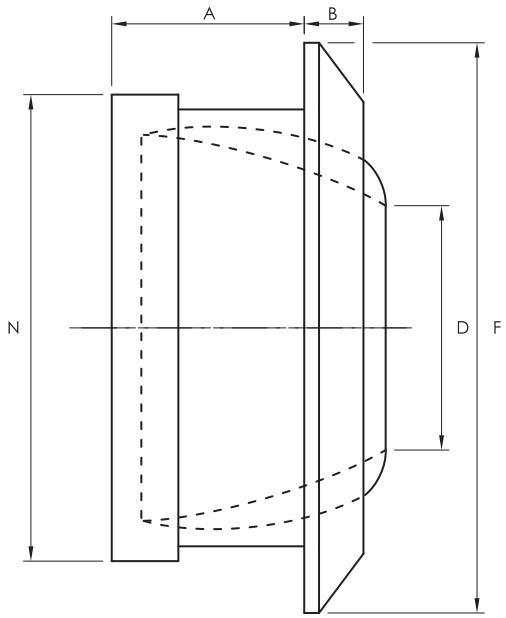

OPERATING RANGE & QUICK SELECTION TABLE					
Nominal Size (N)	**A**eff. (m^2)	**CFM RANGE**	**Throw** @Vt=0.25m/s (m)	**Pressure drop** Δ P (Pa)	**Noise Level** (dBA)
150 Ø	0.00503	65 - 225	18.0 - 31.50	24 - 275	<20 - 41
200 Ø	0.00950	125 - 425	21.0 - 33.50	23 - 277	<20 - 46
250 Ø	0.01360	175 - 620	21.5 - 34.00	24 - 277	<20 - 46
315 Ø	0.01770	225 - 790	22.0 - 35.00	23 - 275	<20 - 47
400 Ø	0.03142	400 - 1400	25.0 - 37.00	23 - 276	<20 - 49

Model : SWD 16 / 24 / 48

The swirl Diffuser with manual adjustment deflectors has been especially developed to enable the direction of air discharge to be altered on site to cater for any changes in room layout or partitions. Due to the rotary swirling motion of the air discharge, induction of room air occurs very quickly resulting in a rapid decay of supply air velocity & temperature difference so that a large number of air changes (up to 30 per hour) can be obtained with temperature difference between + 10 c° & - 10 c°.

SWD 16

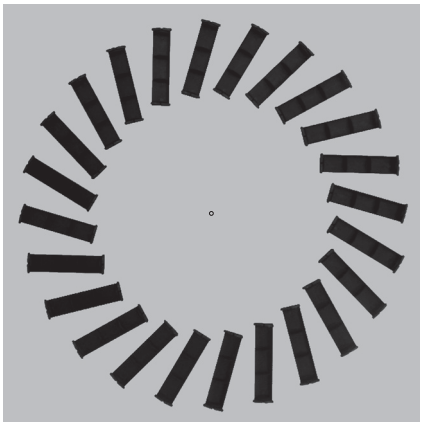

SWD 24

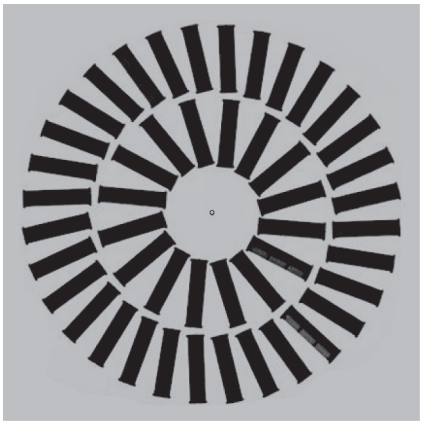

SWD 48

Features & Characteristics :

- Face plate (panel) made of high quality steel sheet finished in white powder coating in standard size 595*595 mm outer dimensions.
- Ready to fit in standard 600*600 mm false ceiling tile.
- The control deflectors are made from plastic (ABS) in black color as standard.
- Each deflector is singularly adjustable & fit in place to give the final geometry.
- The pivoting deflectors can be set in different positions in order to vary the direction of discharged air. By turning all deflectors in the same direction (set @45°), the air flow will discharge in the form of centrifugal swirl motion, in this case this diffuser will be suitable for all applications which require high induction for heating & cooling.
- Available in three different options of number of deflectors giving different quantity of air flow, thus 16, 24 & 48 deflectors.

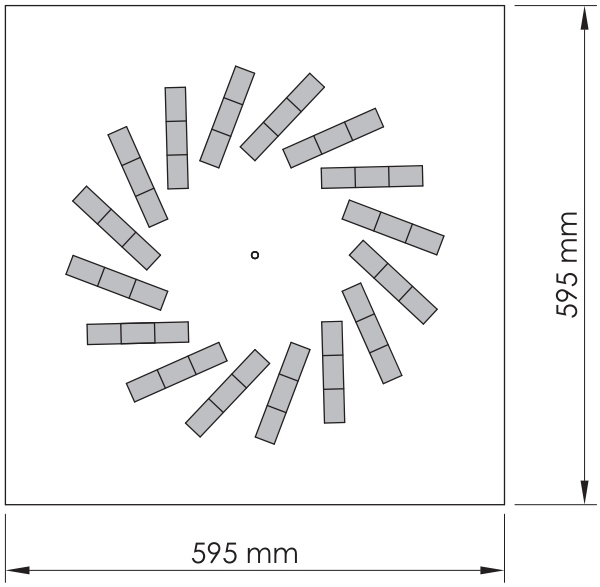

OPERATING RANGE & QUICK SELECTION TABLE							
Model	**Outer Size** (mm)	**Number of Deflectors**	**Aeff.** (m^2)	**CFM Range**	**Throw** @Vt=0.25m/s (m)	**Pressure drop** Δ P (Pa)	**Noise Level** (dBA)
SWD 16	595 x 595	16	0.022	90 - 320	<1 - 6.1	6 - 71	<20 - 54
SWD 24	595 x 595	24	0.032	135 - 480	<1 - 7.3	6 - 72	<20 - 51
SWD 48	595 x 595	48	0.043	185 - 600	<1 - 6.4	6 - 62	<20 - 54

BEST CHOICE INDUSTRIES L.L.C.

MANUFACTURING CENTRAL AIR CONDITIONING AIR OUTLETS

Tel. : 04 - 88 55 422, Fax : 04 - 88 55 421, P.O. Box: 31567, Dubai - U. A. E. - E-mail: bcillc@emirates.net.ae